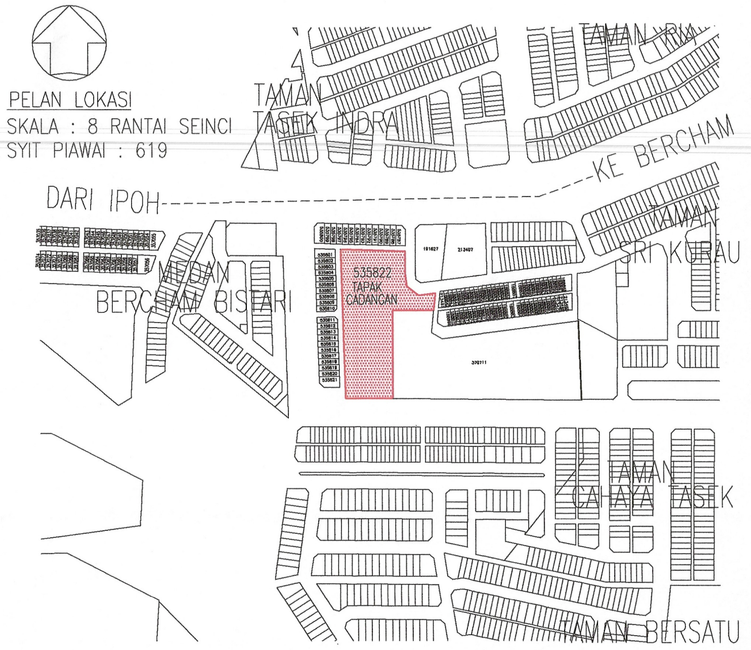

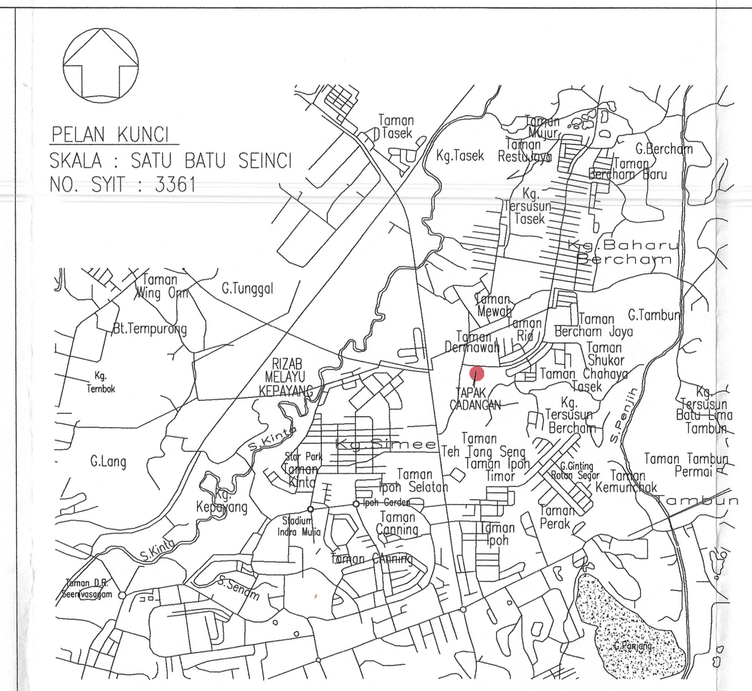

NOTA :

SEMUA ARAS LARAS DILARASKAN DARIPADA BM A2973 = RL 59.371m DI KIRI JALAN TASEK – KG TAWAS. DI HADAPAN TAMAN HOCK LEE, SEBELUM SIMPANG KE JUSCO IPOH

TT --- TIANG TELEKOM
TE --- TIANG ELETRIK
TLI --- TIANG LAMPU ISYARAT
TL --- TIANG LAMPU
SB --- PAPAN TANDA
iL --- INVERT LEVEL
CIL --- CULVERT INVERT LEVEL
MH --- MANHOLE
MHT --- MANHOLE TELEKOM
IWK --- MANHOLE IWK
P --- PAIP
H --- PILI BOMBA
LAP --- LEMBAGA AIR PERAK
TNB --- TNB BOX
MAXIS --- MAXIS BOX
DIGI --- DIGI BOX
ELK --- ELETRIK BOX
--- GAS LINE
--- GUARD RAIL
--- PINTU PAGAR

N
0 5 10 20 30m
SITE PLAN
(SCALE: 1 : 750)
SYIT PIAWAI NO. : 618, 618–32

NOTE :
1) SCALE MEASUREMENT (1:750) UNLESS OTHERWISE STATED.
2) ALL VALUES ARE IN METRE(m) UNLESS OTHERWISE STATED.

LEGEND :
PROP. 225mmø V.C. PIPE WITH CONCRETE MANHOLE
EXIST. 225mmø V.C. PIPE

KIRAAN PENDUDUK SETARA :

JENIS BANGUNAN	UNIT	KADAR	PENGIRAAN KEPERLUAN
1) 1 BLOK SERVIS APARTMENT 27 TINGKAT	394 UNIT	5 PE / UNIT	394 UNIT x 5 PE / UNIT = 1970 PE
2) 1 BLOK BANGUNAN PERNIAGAAN 2 TINGKAT	168m2	3 PE / 100m2	168m2 x 3 PE / 100m2 = 5 PE
JUMLAH	394 UNIT		1975 PE

JUMLAH PE PEMBANGUNAN BARU = 1975 PE
KEGUNAAN SEDIADA IPH 064 = 2521 PE
JUMLAH KEPERLUAN PE BARU = 4496 PE

KAPASITI UNTUK PEMBANGUNAN BARU AKAN MENGALIR KE LURANG SEDIADA (EMH117550), PENYAMBUNGAN TERUS KE 225mmØ VC PAIP PEMBETUNGAN SEDIADA KE LOJI RAWATAN KUMBAHAN SEDIADA (IPH 064, TYPE : AERATED LAGOON) (DESIGN PE = 2521) KAPASITI SEDIADA (2433 PE) TIDAK MENCUKUPI UNTUK MENANGGUNG JUMLAH KEPERLUAN PE BARU (4496 PE), PEMAJU AKAN MENAIKTARAF SISTEM LOJI RAWATAN KUMBAHAN SEDIADA (IPH064) UNTUK MENANGGUNG JUMLAH KEPERLUAN PE BARU.

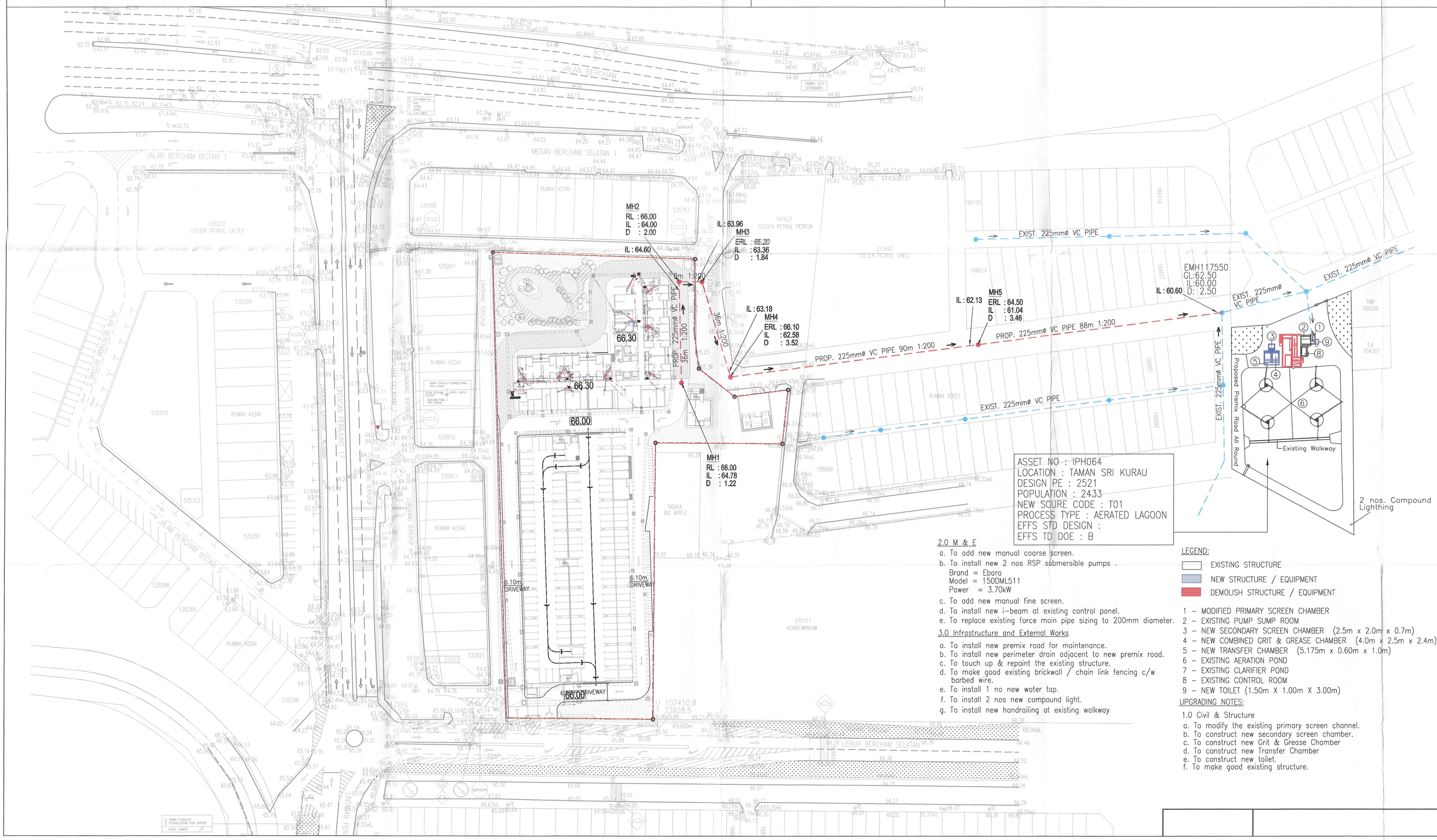

ASSET NO : IPH064
LOCATION : TAMAN SRI KURAU
DESIGN PE : 2521
POPULATION : 2433
NEW SOURE CODE : T01
PROCESS TYPE : AERATED LAGOON
EFFS STD DESIGN :
EFFS TD DOE : B

2.0 M & E

a. To add new manual coarse screen.
b. To install new 2 nos RSP submersible pumps .
Brand = Ebara
Model = 150DML511
Power = 3.70kW
c. To add new manual fine screen.
d. To install new i–beam at existing control panel.
e. To replace existing force main pipe sizing to 200mm diameter.

3.0 Infrastructure and External Works

a. To install new premix road for maintenance.
b. To install new perimeter drain adjacent to new premix road.
c. To touch up & repaint the existing structure.
d. To make good existing brickwall / chain link fencing c/w barbed wire.
e. To install 1 no new water tap.
f. To install 2 nos new compound light.
g. To install new handrailing at existing walkway

LEGEND:
EXISTING STRUCTURE
NEW STRUCTURE / EQUIPMENT
DEMOLISH STRUCTURE / EQUIPMENT

1 – MODIFIED PRIMARY SCREEN CHAMBER
2 – EXISTING PUMP SUMP ROOM
3 – NEW SECONDARY SCREEN CHAMBER (2.5m x 2.0m x 0.7m)
4 – NEW COMBINED GRIT & GREASE CHAMBER (4.0m x 2.5m x 2.4m)
5 – NEW TRANSFER CHAMBER (5.175m x 0.60m x 1.0m)
6 – EXISTING AERATION POND
7 – EXISTING CLARIFIER POND
8 – EXISTING CONTROL ROOM
9 – NEW TOILET (1.50m X 1.00m X 3.00m)

UPGRADING NOTES:

1.0 Civil & Structure

a. To modify the existing primary screen channel.
b. To construct new secondary screen chamber.
c. To construct new Grit & Grease Chamber
d. To construct new Transfer Chamber
e. To construct new toilet.
f. To make good existing structure.

LOCAL AUTHORITY
INDAH WATER KONSORTIUM SDN. BHD.
AGENSI PERAKUAN - PEMBETUNGAN (diluluskan oleh SPAN)
PELAN-PELAN UNTUK MEMBINA REKABENTUK SISTEM PEMBETUNGAN ADALAH
DILULUSKAN
BERDASKAN KEPADA PENGESAHAN/TANDATANGAN JURUTERA PROFESIONAL BERKENAAN DAN TERTERTAKLUK KEPADA SYARAT-SYARAT BIL.: 16
DI DALAM FAIL IWK/C/ DK01/22/0034.
I) KELULUSAN ASAL
II) PINDAAN PERTAMA
III) PINDAAN KEDUA
Pengurus
Agensi Perakuan - Pembetungan
Pirak Darul Ridzuan
(diluluskan oleh SPAN)
Tarikh 2/2/23
KELULUSAN INI TIDAK TERMASUK REKABENTUK STRUKTUR KEJURUTERAAN

PROJECT :
CADANGAN PAIP PEMBETUNGAN BAGI :
CADANGAN MEMBINA 1 BLOK SERVIS APARTMENT 27 TINGKAT YANG MENGANDUNGI :
1. 200 UNIT SERVIS APARTMENT JENIS A
2. 186 UNIT SERVIS APARTMENT JENIS B
3. 4 UNIT SERVIS DUPLEX LOFT TYPE A
4. 4 UNIT SERVIS DUPLEX LOFT TYPE B
DENGAN KEMUDAHAN REKREASI (KOLAM RENANG, GIM, ROOF GARDEN, DEWAN KOMUNITI), PEJABAT PENGURUSAN, PONDOK PENGAWAL, KEBUK SAMPAH & KEMUDAHAN–KEMUDAHAN LAIN, 1 BLOK BANGUNAN PERNIAGAAN 2 TINGKAT 1 BLOK TEMPAT LETAK KERETA 4 TINGKAT DI ATAS PLOT 1 DAN 1 UNIT PENCAWANG ELEKTRIK TNB DI ATAS PLOT 2, DI ATAS LOT 535822, LEBUH BERCHAM SELATAN, MEDAN BERCHAM SELATAN, BERCHAM, MUKIM HULU KINTA, DAERAH KINTA, PERAK DARUL RIDZUAN. UNTUK TETUAN LIFESTYLE ENRICHED SDN. BHD.

SEWERAGE

REV. NO.	DESCRIPTION	DATE

OWNER'S SIGNATURE

LIFESTYLE ENRICHED SDN. BHD. (1060108–A)
NAMA : HO SENG LOONG
K/P NO. : 821222–08–5897
ALAMAT : 2–23(A), FESTIVAL WALK @ IPOH, JALAM MEDAN IPOH, MEDAN IPOH BISTARI, 31400, IPOH, PERAK.
TEL NO. : 05–5479298

CONSULTANT'S SIGNATURE

I HEREBY CERTIFY THAT THESE WORKS HAVE BEEN DESIGNED BY ME IN ACCORDANCE WITH SOUND ENGINEERING PRACTICE AND THAT I TAKE FULL RESPONSIBILITY FOR THE DESIGN AND PROPER PERFORMANCE OF THE SAME.

JURUTERA PROFESIONAL AGENSI PERAKUAN - PEMBETUNGAN AWAM Ir. JOSHUA LEONG CHEE K'IZ C116026 MALAYSIA

IR. JOSHUA LEONG CHEE K'IZ M. I. E. M. P. ENG. (CIVIL)
AJL PERUNDING
AJL Civil & Structural Engineering Consultancy
No.64, Tingkat Ipoh 1, Taman Ipoh, 31400 Ipoh, Perak Darul Ridzuan.
Tel. : 05–5450 560
Email : ajlperunding@gmail.com

DRAWING TITLE :
SITE PLAN, LOCATION PLAN, KEY PLAN

DESIGNED	: JL	DRAWN	: JOANNE
DATE	: DECEMBER 2022	CHECKED	: JL
STATUS	: SUBMISSION1(PDC2)	SCALE	: 1 : 750
AJL310/INFRA/SW/1 OF 6			REV 0

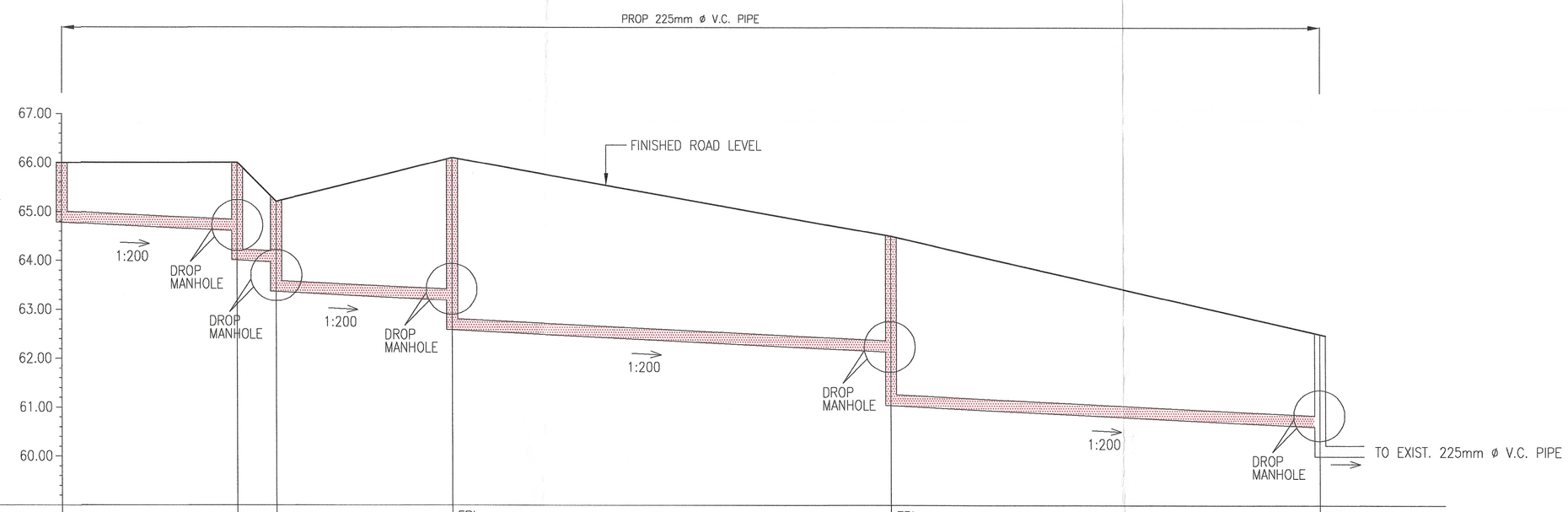

DATUM 59.00m

FINISHED ROAD LEVEL(m)	66.00		66.00	65.20		ERL 66.10			ERL 64.50			ERL 62.50
PROP. INVERT LEVEL(m)	64.78	64.60	64.00	63.96 63.36	63.18	62.58		62.13	61.04		60.60	EIL 60.00
PROP. MANHOLE DEPTH(m)	1.22	1.40	2.00	1.84	2.92	3.52		2.37	3.46		1.90	ED 2.50
DISTANCE(m)	0.00		36.00	44.00		80.00			170.00			258.00
	MH1		MH2	MH3		MH4			MH5			EMH117550

VERTICAL SCALE 1:75
HORIZONTAL SCALE 1:750

SECTION MH1 – EMH117550

LOCAL AUTHORITY

INDAH WATER KONSORTIUM SDN. BHD.
AGENSI PERAKUAN - PEMBETUNGAN (diakreditasi oleh SIRIM)
PELAN-PELAN UNTUK MEMBINA
REKABENTUK SISTEM PEMBETUNGAN
ADALAH
DILULUSKAN
BERASASKAN KEPADA PENGESAHAN/TANDATANGAN
JURUTERA PROFESIONAL BERKENAAN DAN TERTAKLUK
KEPADA SYARAT-SYARAT BIL:- hingga 16
DI DALAM FAIL IWK/C/ PR 01/22/0034
i) KELULUSAN ASAL
ii) PINDAAN PERTAMA
iii) PINDAAN KEDUA
Pengurus
Agensi Perakuan - Pembetungan
Perak Darul Ridzuan
(diklasik oleh SIRIM)
Tarikh 2/2/23
KELULUSAN INI TIDAK TERMASUK
REKABENTUK STRUKTUR KEJURUTERAAN

PROJECT :

CADANGAN PAIP PEMBETUNGAN BAGI :
CADANGAN MEMBINA 1 BLOK SERVIS APARTMENT
27 TINGKAT YANG MENGANDUNGI :
1. 200 UNIT SERVIS APARTMENT JENIS A
2. 186 UNIT SERVIS APARTMENT JENIS B
3. 4 UNIT SERVIS DUPLEX LOFT TYPE A
4. 4 UNIT SERVIS DUPLEX LOFT TYPE B
DENGAN KEMUDAHAN REKREASI (KOLAM RENANG, GIM, ROOF GARDEN, DEWAN KOMUNITI), PEJABAT PENGURUSAN, PONDOK PENGAWAL, KEBUK SAMPAH & KEMUDAHAN-KEMUDAHAN LAIN, 1 BLOK BANGUNAN PERNIAGAAN 2 TINGKAT 1 BLOK TEMPAT LETAK KERETA 4 TINGKAT DI ATAS PLOT 1 DAN 1 UNIT PENCAWANG ELEKTRIK TNB DI ATAS PLOT 2, DI ATAS LOT 535822, LEBUH BERCHAM SELATAN, MEDAN BERCHAM SELATAN, BERCHAM, MUKIM HULU KINTA, DAERAH KINTA, PERAK DARUL RIDZUAN. UNTUK TETUAN LIFESTYLE ENRICHED SDN. BHD.

SEWERAGE

REV. NO.	DESCRIPTION	DATE

OWNER'S SIGNATURE

LIFESTYLE ENRICHED SDN. BHD. (1060108-A)

NAMA : HO SENG LOONG
I/C NO. : 821222-08-5897
ALAMAT : 2-23(A), FESTIVAL WALK @ IPOH, JALAN MEDAN IPOH, MEDAN IPOH BISTARI, 31400, IPOH, PERAK.
TEL NO. : 05-5479298

CONSULTANT'S SIGNATURE

I HEREBY CERTIFY THAT THESE WORKS HAVE BEEN DESIGNED BY ME IN ACCORDANCE WITH SOUND ENGINEERING PRACTICE AND THAT I TAKE FULL RESPONSIBILITY FOR THE DESIGN AND PROPER PERFORMANCE OF THE SAME.

JURUTERA PROFESIONAL BADAN PERUNDING MALAYSIA
AWAM
Ir. JOSHUA LEONG CHEE K'IZ
C116026
MALAYSIA

IR. JOSHUA LEONG CHEE K'IZ M. I. E. M. P. ENG. (CIVIL)

AJL PERUNDING
Civil & Structural Engineering Consultancy
No.64, Tingkat Ipoh 1, Taman Ipoh, 31400
Ipoh, Perak Darul Ridzuan.
Tel. : 05-5450 560
Email : ajlperunding@gmail.com

DRAWING TITLE :

LONGITUDINAL SECTION

DESIGNED	: JL	DRAWN	: JOANNE
DATE	: DECEMBER 2022	CHECKED	: JL
STATUS	: SUBMISSION1(PDC2)	SCALE	: 1 : 750

REV 0

AJL310/INFRA/SW/2 OF 6

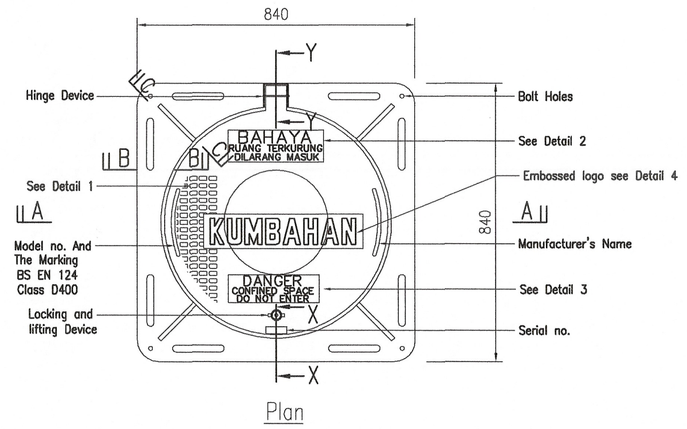

Plan

Typical details of heavy duty D.I. manhole cover and frame

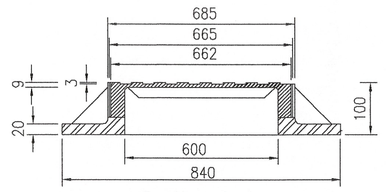

Section A–A

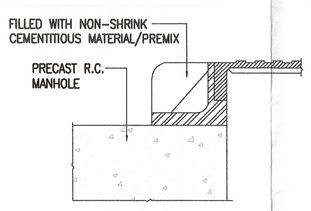

Section B–B

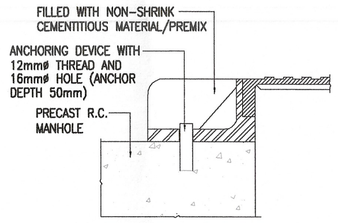

Section C–C

Typical section of heavy duty D.I. manhole cover and frame

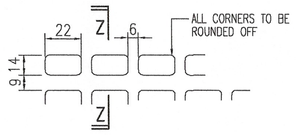

Detail 1
(Typical surface detail)

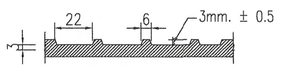

section z – z

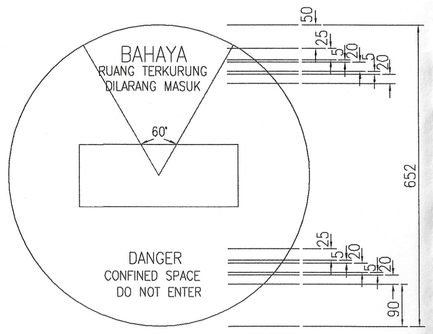

Detail 2 & 3 embossed design

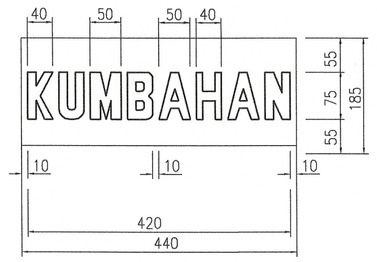

Detail '4' : Embossed Logo

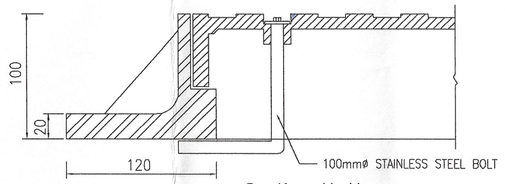

Section X–X
Typical Locking Device

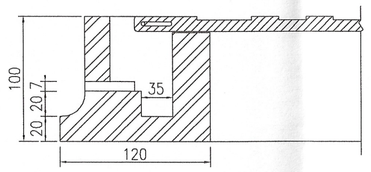

Section Y–Y
Typical Hinge

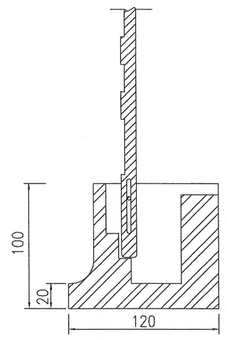

Section Y–Y
Cover Hinged open at 90°

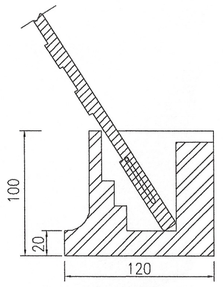

Section Y–Y
Cover Hinged open at 100°

Standard details of hinge and locking device

FIGURE A1 : STANDARD MANHOLE COVER

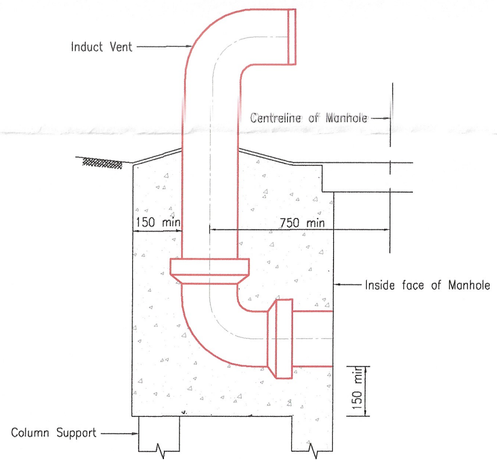

TYPICAL INDUCT VENT DETAIL

NOTE:–

1. All dimensions are millimetres.
2. Diameter of induct vent shll be approximately 1/2 of the forcemain but shall not exceed 300mm.

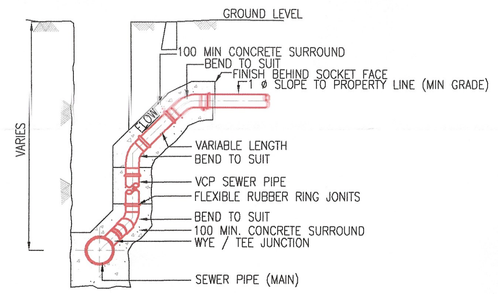

DEEP JUNCTION CONNECTION

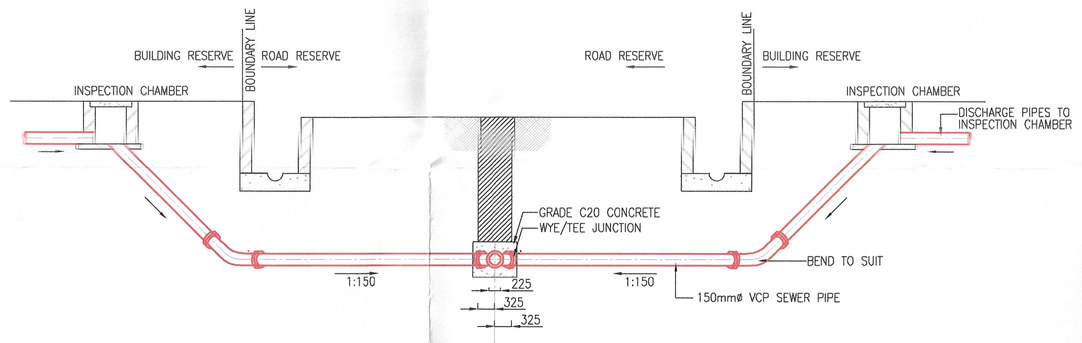

TYPICAL OF JUNCTION CONNECTION

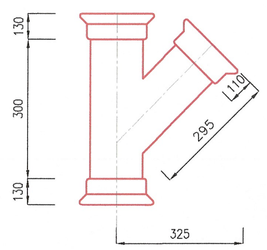

VC SEWER PIPE FITTING FOR 150/225 mm WYE

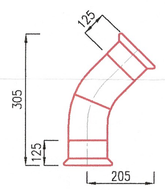

VC SEWER PIPE FITTING FOR 150mm 45° BEND

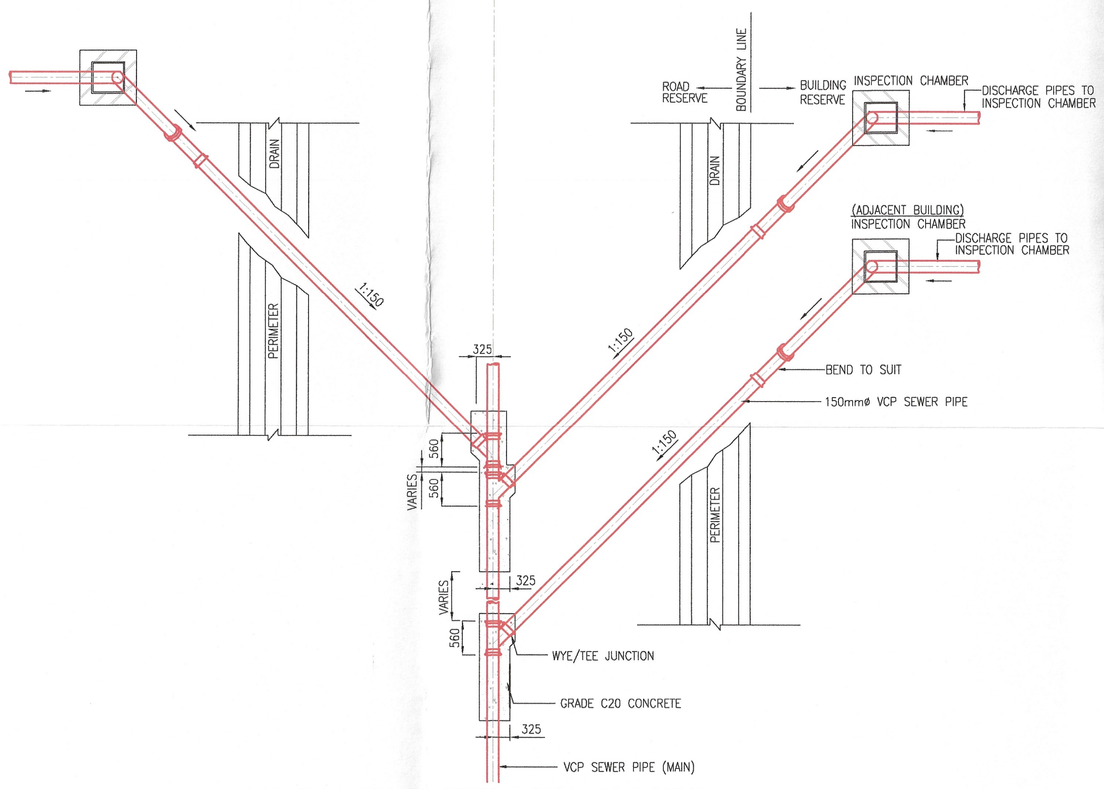

PLAN VIEW OF SEWER LATERAL CONNECTION

FIGURE A11 : DETAILS OF INSPECTION CHAMBER CONNECTION TO MAIN SEWER RETICULATION PIPE FOR V.C. PIPE

LOCAL AUTHORITY

INDAH WATER KONSORTIUM SDN. BHD.
AGENSI PERAKUAN - PEMBETUNGAN (diiktiraf oleh SPAN)
PELAN-PELAN UNTUK MEMBINA REKABENTUK SISTEM PEMBETUNGAN ADALAH
DILULUSKAN
BERDASARKAN KEPADA PENGESAHAN/TANDATANGAN JURUTERA PROFESIONAL BERKENAAN DAN TERTAKLUK KEPADA SYARAT-SYARAT BIL:- Hingga 16
DI DALAM FAIL IWK/CJ PK 01/22/0034
I) KELULUSAN ASAL
II) PINDAAN PERTAMA
III) PINDAAN KEDUA
Pengurus
Agensi Perakuan - Pembetungan
Prnik Darul Ridzuan
(diiktiraf oleh SPAN)
Tarikh 2/2/23
KELULUSAN INI TIDAK TERMASUK REKABENTUK STRUKTUR KEJURUTERAAN

PROJECT :

CADANGAN PAIP PEMBETUNGAN BAGI :
CADANGAN MEMBINA 1 BLOK SERVIS APARTMENT 27 TINGKAT YANG MENGANDUNGI :
1. 200 UNIT SERVIS APARTMENT JENIS A
2. 186 UNIT SERVIS APARTMENT JENIS B
3. 4 UNIT SERVIS DUPLEX LOFT TYPE A
4. 4 UNIT SERVIS DUPLEX LOFT TYPE B
DENGAN KEMUDAHAN REKREASI (KOLAM RENANG, GIM, ROOF GARDEN, DEWAN KOMUNITI), PEJABAT PENGURUSAN, PONDOK PENGAWAL, KEBUK SAMPAH & KEMUDAHAN–KEMUDAHAN LAIN, 1 BLOK BANGUNAN PERNIAGAAN 2 TINGKAT 1 BLOK TEMPAT LETAK KERETA 4 TINGKAT DI ATAS PLOT 1 DAN 1 UNIT PENCAWANG ELEKTRIK TNB DI ATAS PLOT 2, DI ATAS LOT 535822, LEBUH BERCHAM SELATAN, MEDAN BERCHAM SELATAN, BERCHAM, MUKIM HULU KINTA, DAERAH KINTA, PERAK DARUL RIDZUAN. UNTUK TETUAN LIFESTYLE ENRICHED SDN. BHD.

SEWERAGE

REV. NO.	DESCRIPTION	DATE

OWNER'S SIGNATURE

LIFESTYLE ENRICHED SDN. BHD. (1060108–A)

NAMA : LIM SENG LOONG
I/C NO. : 821222–08–5897
ALAMAT : 2–23(A), FESTIVAL WALK @ IPOH, JALAN MEDAN IPOH, MEDAN IPOH BISTARI, 31400, IPOH, PERAK.
TEL NO. : 05–5479298

CONSULTANT'S SIGNATURE

I HEREBY CERTIFY THAT THESE WORKS HAVE BEEN DESIGNED BY ME IN ACCORDANCE WITH SOUND ENGINEERING PRACTICE AND THAT I TAKE FULL RESPONSIBILITY FOR THE DESIGN AND PROPER PERFORMANCE OF THE SAME.

JURUTERA PROFESIONAL BERDAFTAR PERAKUAN-PERAKUAN MALAYSIA
AWAM
Ir. JOSHUA LEONG CHEE K'IZ
C11602G
MALAYSIA

IR. JOSHUA LEONG CHEE K'IZ M. I. E. M. P. ENG. (CIVIL)
AJL PERUNDING
Civil & Structural Engineering Consultancy
No.64, Tingkat Ipoh 1, Taman Ipoh, 31400 Ipoh, Perak Darul Ridzuan.
Tel. : 05–5450 560
Email : ajlperunding@gmail.com

DRAWING TITLE :

SEWER MANHOLE & CONNECTION DETAILS (1)

DESIGNED	: JL	DRAWN	: JOANNE
DATE	: DECEMBER 2022	CHECKED	: JL
STATUS	: SUBMISSION1(PDC2)	SCALE	: 1 : 100

AJL310/INFRA/SW/3 OF 6 — REV 0

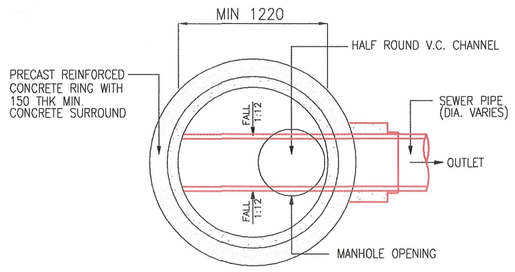

SECTIONAL PLAN VIEW OF MANHOLE TYPE A (FIRST MANHOLE)

NOTE: ONE OUTGOING PIPE

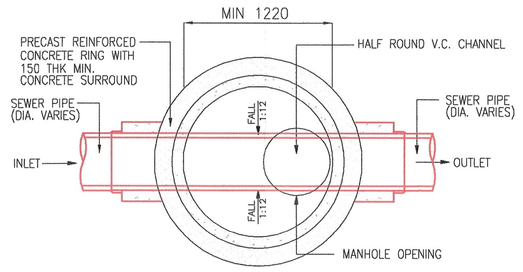

SECTIONAL PLAN VIEW OF MANHOLE TYPE B (STRAIGHT THROUGH)

NOTE: ONE INCOMING AND ONE OUTGOING PIPE

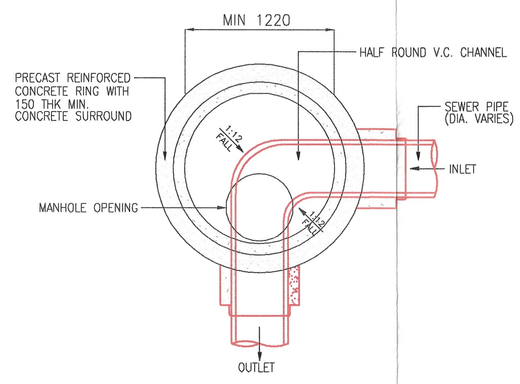

SECTIONAL PLAN VIEW OF MANHOLE TYPE C (CHANGE OF DIRECTION – 90° BEND)

NOTE: ONE INCOMING AND ONE OUTGOING PIPE

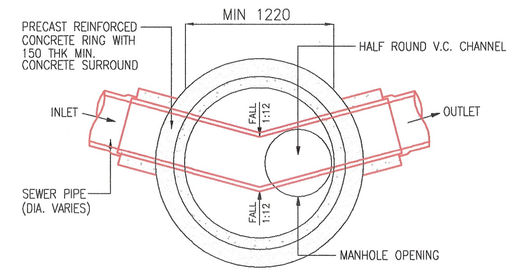

SECTIONAL PLAN VIEW OF MANHOLE TYPE D (CHANGE OF DIRECTION)

NOTE: ONE INCOMING AND ONE OUTGOING PIPE

NOTE

1. ALL DIMENSIONS ARE IN MILLIMETRES UNLESS OTHERWISE STATED.
2. DIAMETER OF PIPE INSIDE MANHOLE BASE TO BE OF EQUAL SIZE OR LARGER THAN THE INCOMING PIPE DIAMETER.
3. PIPE CONNECTIONS TO ANY ONE MANHOLE SHALL BE MAXIMUM 4 NUMBERS. ADDITIONAL MANHOLE SHALL BE PROVIDED TO RECEIVE EXTRA PIPE CONNECTIONS.
4. THE WALL OF MANHOLE THAT RECEIVES INCOMING PIPES SHALL BE CAST MONOLHITICALLY.
5. ALL COATING DETAILS TI REFER TO SECTIONS OF MANHOLE DRAWINGS.
6. FOR MANHOLE COVER WITH HINGE, OPENING OF COVER SHALL BE PERPENDICULAR TO THE DIRECTION OF FLOW AND IN ANYWAY SHOULD NOT OBSTRUCT THE ACCESS OF MANHOLE FOR MAINTENANCE WORKS.

Depth to Solfit from Cover Level (m)	DN Largest Pipe in Manhole (mm)	Min. Internal Dimension (mm)
< 1.5	< 150	1000
	225 to 300	1200
	375 to 450	1350
	525 to 710	1500
	820 to 900	1800
	> 900	Subject to designer's requirements based on site condition
> 1.5	< 300	1200
	375 to 450	1350
	525 to 710	1500
	820 to 900	1800
	> 900	Subject to designer's requirements based on site condition

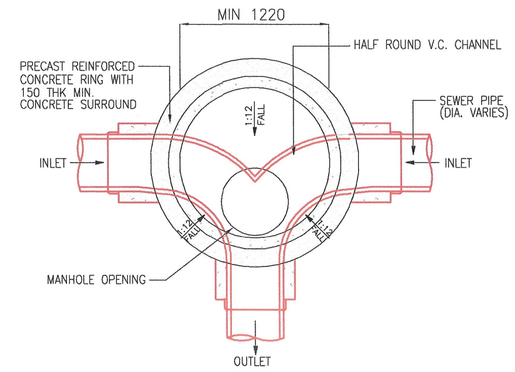

SECTIONAL PLAN VIEW OF MANHOLE TYPE F (TWO INCOMING SEWER)

NOTE: TWO INCOMING AND ONE OUTGOING PIPE

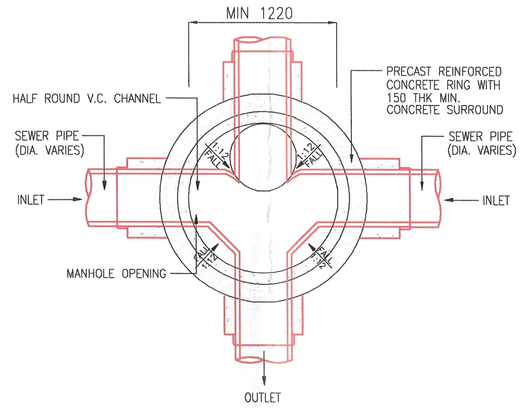

SECTIONAL PLAN VIEW OF MANHOLE TYPE G (THREE INCOMING SEWER)

NOTE: THREE INCOMING AND ONE OUTGOING PIPE

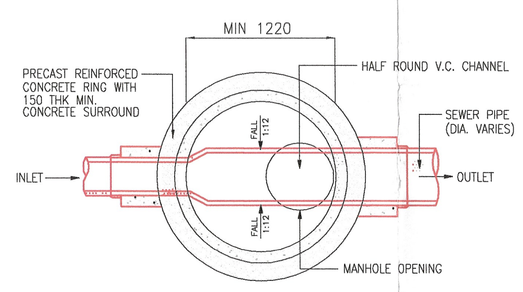

SECTIONAL PLAN VIEW OF MANHOLE TYPE H (DIAMETER CHANGE)

NOTE: ONE INCOMING AND ONE OUTGOING PIPE

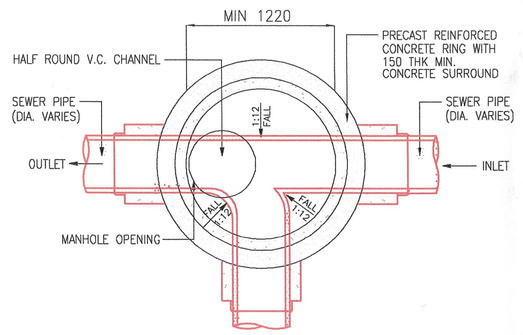

SECTIONAL PLAN VIEW OF MANHOLE TYPE E (MULTIPLE INCOMONG)

NOTE: TWO INCOMING AND ONE OUTGOING PIPE

FIGURE A2 : PLAN VIEW OF TYPICAL MANHOLE

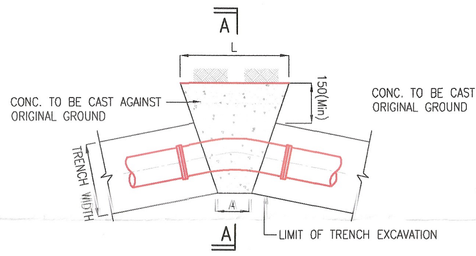

PLAN (LESS THAN 30° BEND)

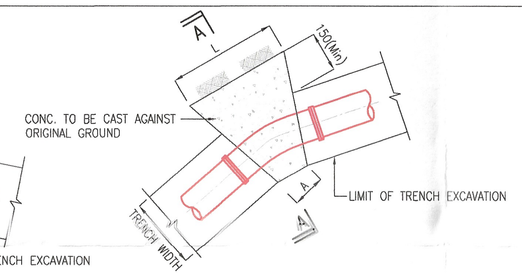

PLAN (30° AND 60° BEND)

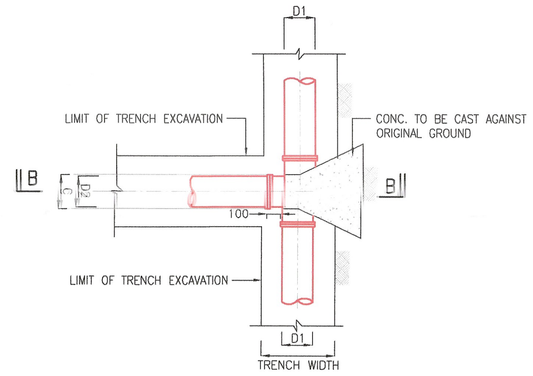

PLAN

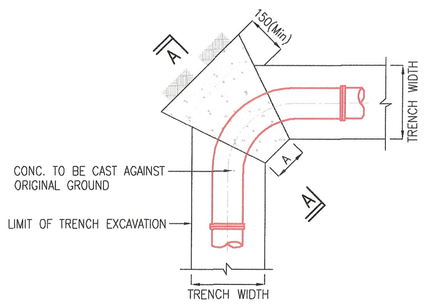

PLAN (MORE THAN 60° BEND)

TYPICAL CONCRETE THRUST BLOCK FOR HORIZONTAL BEND

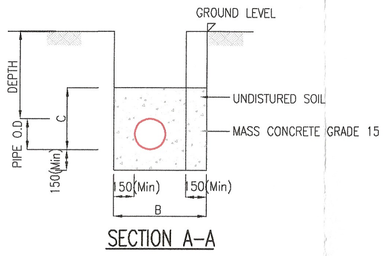

SECTION A–A

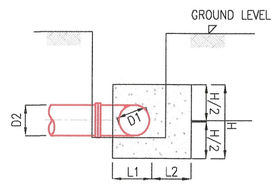

SECTION B–B

TYPICAL CONCRETE THRUST BLOCK FOR CONCRETE TEE (D1>D2)

DIA. OF PIPE / BEND		(mm)	(mm)	(mm)	(mm)	(mm)	(mm)	(mm)	(mm)	(mm)
		UP TO 150	200	250	305	350	400	450	500	610
11 1/4 (TYPE 1)	L4	450	400	650	920	1000	1100	1200	1300	1500
	D4	800	900	1000	1050	1200	1300	1400	1500	1600
	B2	800	900	920	920	1000	1100	1200	1400	1500
15 (TYPE 1)	L4	600	750	800	950	1100	1200	1300	1400	1600
	D4	900	950	1050	1100	1200	1350	1400	1600	1600
	B2	900	900	1000	1100	1200	1350	1400	1400	1600
22 1/2 (TYPE 1)	L4	600	820	950	1150	1300	1400	1500	1600	1800
	D4	900	1000	1200	1300	1400	1550	1700	1800	2000
	B2	900	920	1050	1200	1300	1400	1500	1650	1900
30 (TYPE 1)	L4	650	820	1000	1300	1500	1600	1700	1800	2000
	D4	950	1150	1300	1400	1500	1600	1750	1900	2250
	B2	950	1050	1200	1300	1500	1600	1700	1850	2000
45 (TYPE 2)	L4	860	1070	1300	1500	1550	1650	1800	2100	2300
	D4	1050	1300	1400	1600	1800	2000	2100	2100	2500
	B2	950	1070	1300	1400	1600	1800	1950	2100	2300

TYPICAL CONCRETE THRUSTBLOCK FOR VERTICAL BEND

D2 \ D1		(mm)	(mm)	(mm)	(mm)	(mm)	(mm)	(mm)	(mm)	(mm)	(mm)
		150	200	250	305	350	400	450	500	610	610
80mm OFF TAKE TEE C=230mm	B	460	460	460	610	610	–	–	–	–	–
	L1	150	460	230	230	305	–	–	–	–	–
	L2	460	380	535	535	610	–	–	–	–	–
	H	380	535	460	535	535	–	–	–	–	–
100mm OFF TAKE TEE C=305mm	B	535	230	535	535	535	535	535	535	535	535
	L1	150	460	305	305	305	305	305	380	460	610
	L2	460	460	535	535	610	610	685	685	685	685
	H	460	610	535	535	535	685	685	760	840	1000
150mm OFF TAKE TEE C=305mm	B	610	230	610	610	610	610	610	610	610	610
	L1	150	460	305	305	305	305	305	380	460	610
	L2	460	535	535	535	610	610	685	685	685	685
	H	535	760	535	610	610	685	685	760	840	1000
200mm OFF TAKE TEE C=380mm	B	–	230	760	760	685	685	685	760	840	–
	L1	–	460	230	305	305	380	380	380	460	–
	L2	–	840	535	610	610	685	685	685	685	–
	H	–	–	840	840	915	915	990	990	1070	–
305mm OFF TAKE TEE C=710mm	B	–	–	–	1410	1410	1410	1410	1410	1410	1530
	L1	–	–	–	410	410	530	530	610	610	710
	L2	–	–	–	610	610	610	610	610	610	710
	H	–	–	–	900	900	900	900	900	1000	1120
500mm OFF TAKE TEE C=1220mm	B	–	–	–	–	–	–	–	1530	1530	1530
	L1	–	–	–	–	–	–	–	760	760	760
	L2	–	–	–	–	–	–	–	900	900	900
	H	–	–	–	–	–	–	–	1200	1200	1200
500mm OFF TAKE TEE C=1220mm	B	–	–	–	–	–	–	–	–	1980	1980
	L1	–	–	–	–	–	–	–	–	910	910
	L2	–	–	–	–	–	–	–	–	910	910
	H	–	–	–	–	–	–	–	–	1370	1370
762mm OFF TAKE TEE C=1980mm	B	–	–	–	–	–	–	–	–	–	2740
	L1	–	–	–	–	–	–	–	–	–	1070
	L2	–	–	–	–	–	–	–	–	–	1070
	H	–	–	–	–	–	–	–	–	–	1530

SCHEDULE FOR TEE JUNCTION

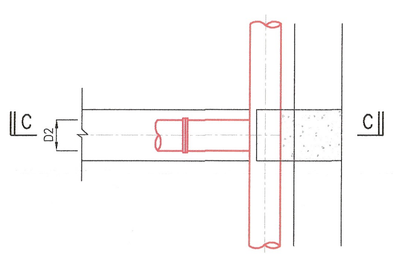

PLAN

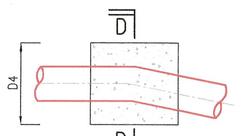

PLAN

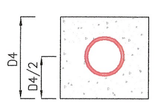

SECTION D–D

TYPICAL CONCRETE THRUST BLOCK FOR VERTICAL BEND

NOMINAL OF PIPE DIAMETER ND (mm)	11 1/4 (TYPE 1)				22 1/4 (TYPE 1)				45 (TYPE 2)				90 (TYPE 2)			
	A (mm)	B (mm)	C (mm)	L (mm)	A (mm)	B (mm)	C (mm)	L (mm)	A (mm)	B (mm)	C (mm)	L (mm)	A (mm)	B (mm)	C (mm)	L (mm)
UP TO 150	150	880	880	160	200	880	880	200	310	880	880	450	460	880	880	800
200 TO 250	250	950	950	300	300	950	950	580	700	950	950	1100	1250	950	950	2020
305	250	1100	1100	400	470	1100	1100	700	800	1100	1100	1400	1500	1100	1100	2500
350	300	1200	1200	450	500	1200	1200	900	850	1200	1200	1700	1550	1200	1200	2600
400	400	1800	1900	400	500	1900	1900	750	850	1800	1900	1400	1550	1800	1900	2600
450	350	1800	2100	420	500	1800	2100	850	900	1800	2100	1600	1600	1800	2100	2950
500	500	1400	1350	800	800	1400	1350	1600	1500	1400	1700	2500	1700	1600	1700	3000
610	600	1300	1200	1300	800	1300	1550	1800	1500	1300	1700	3000	2000	1500	2000	3000
760	600	1300	1200	1300	800	1300	1550	1800	1500	1300	1700	3000	2000	1500	2000	3000

SCHEDULE FOR HORIZONTAL BEND

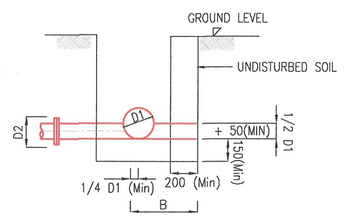

SECTION C–C

D1 (ND)	D2 (ND)	A (mm)	B (mm)	C (mm)	L (mm)
760	150	300	950	575	300

SCHEDULE FOR INVERT LEVEL TEE

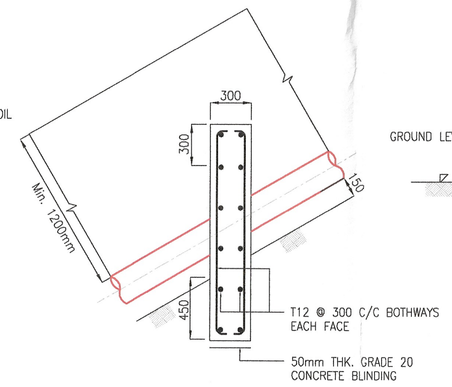

ELEVATION (ANCHOR BLOCK)

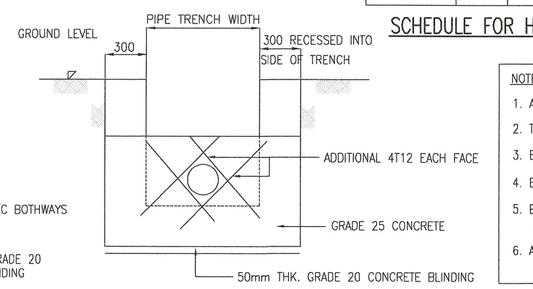

SECTION E–E

NOTE

1. ALL DIMENSIONS ARE IN MILLIMETERS UNLESS OTHERWISE STATED.
2. THRUST BLOCK AS DESIGNED FOR A PRESSURE OF 140m HEAD.
3. EARTH PASSIVE RESISTANCE IS TAKEN AS 50kN/m2.
4. BEARINGS RESISTANCE IS TAKEN AS 100kN/m2.
5. BOTH PASSIVE RESISTANCE & BEARINGS PRESSURE SHALL BE DECIDED ON SITE BY THE ENGINEER.
6. ALL CONCRETE USED TO BE GRADE 20 UNLESS OTHERWISE SPECIFIED BY THE ENGINEER.

FIGURE A12 : TYPICAL DETAILS OF CONCRETE THRUST AND ANCHOR BLOCK

LOCAL AUTHORITY

INDAH WATER KONSORTIUM SDN. BHD.
AGENSI PERAKUAN - PEMBETUNGAN (diluluskan oleh SPAN)

PELAN-PELAN UNTUK MEMBINA REKABENTUK SISTEM PEMBETUNGAN ADALAH

DILULUSKAN

BERTASKAN KEPADA PENGESAHAN/TANDATANGAN JURUTERA PROFESIONAL BERKENAAN DAN TERTERTAKLUK KEPADA SYARAT-SYARAT BIL: 1 bagi 16
DI DALAM FAIL IWK(C) PK 01/22/0034.

I) KELULUSAN ASAL
II) PINDAAN PERTAMA
III) PINDAAN KEDUA

Pengurus
Agensi Perakuan - Pembetungan
Perak Darul Ridzuan
(diluluskan oleh SPAN)
Tarikh: 2/2/23

KELULUSAN INI TIDAK TERMASUK REKABENTUK STRUKTUR KEJURUTERAAN

PROJECT :

CADANGAN PAIP PEMBETUNGAN BAGI :
CADANGAN MEMBINA 1 BLOK SERVIS APARTMENT 27 TINGKAT YANG MENGANDUNGI :
1. 200 UNIT SERVIS APARTMENT JENIS A
2. 186 UNIT SERVIS APARTMENT JENIS B
3. 4 UNIT SERVIS DUPLEX LOFT TYPE A
4. 4 UNIT SERVIS DUPLEX LOFT TYPE B
DENGAN KEMUDAHAN REKREASI (KOLAM RENANG, GIM, ROOF GARDEN, DEWAN KOMUNITI), PEJABAT PENGURUSAN, PONDOK PENGAWAL, KEBUK SAMPAH & KEMUDAHAN–KEMUDAHAN LAIN, 1 BLOK BANGUNAN PERNIAGAAN 2 TINGKAT 1 BLOK TEMPAT LETAK KERETA 4 TINGKAT DI ATAS PLOT 1 DAN 1 UNIT PENCAWANG ELEKTRIK TNB DI ATAS PLOT 2, DI ATAS LOT 535822, LEBUH BERCHAM SELATAN, MEDAN BERCHAM SELATAN, BERCHAM, MUKIM HULU KINTA, DAERAH KINTA, PERAK DARUL RIDZUAN.
UNTUK TETUAN LIFESTYLE ENRICHED SDN. BHD.

SEWERAGE

REV. NO.	DESCRIPTION	DATE

OWNER'S SIGNATURE

LIFESTYLE ENRICHED SDN. BHD. (1060108-A)

NAMA : HO SENG LOONG
I/C NO. : 621222-08-5897
ALAMAT : 2-23(A), FESTIVAL WALK @ IPOH, JALAN MEDAN IPOH, MEDAN IPOH BISTARI, 31400, IPOH, PERAK.
TEL NO. : 05-5479298

CONSULTANT'S SIGNATURE

I HEREBY CERTIFY THAT THESE WORKS HAVE BEEN DESIGNED BY ME IN ACCORDANCE WITH SOUND ENGINEERING PRACTICE AND THAT I TAKE FULL RESPONSIBILITY FOR THE DESIGN AND PROPER PERFORMANCE OF THE SAME.

JURUTERA PROFESIONAL BERDAFTAR PERAKUAN-WAKIL AWAM Ir. JOSHUA LEONG CHEE K'IZ C116026 MALAYSIA

IR. JOSHUA LEONG CHEE K'IZ
M. I. E. M.
P. ENG. (CIVIL)
AJL PERUNDING
Civil & Structural Engineering Consultancy
No.64, Tingkat Ipoh 1, Taman Ipoh, 31400 Ipoh, Perak Darul Ridzuan.
Tel. : 05-5450 560
Email : ajlperunding@gmail.com

DRAWING TITLE :

SEWER MANHOLE & CONNECTION DETAILS (2)

DESIGNED	: JL	DRAWN	: JOANNE
DATE	: DECEMBER 2022	CHECKED	: JL
STATUS	: SUBMISSION1(PDC2)	SCALE	: 1 : 100

AJL310/INFRA/SW/4 OF 6 — REV 0

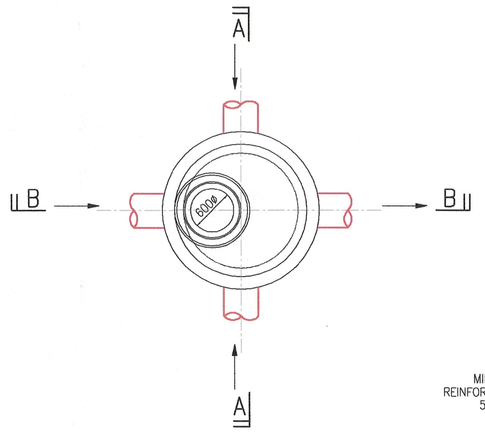

PLAN VIEW

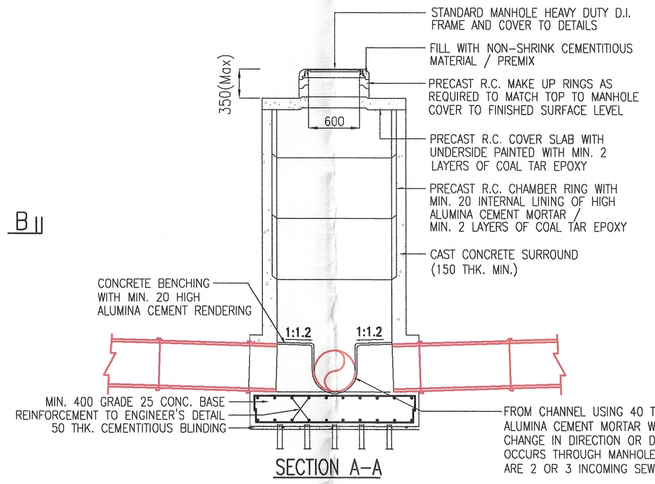

SECTION A–A

(GROUND LEVEL TO INVERT LEVEL OF PIPE 1.2 ≤ D < 2.5 METERS)

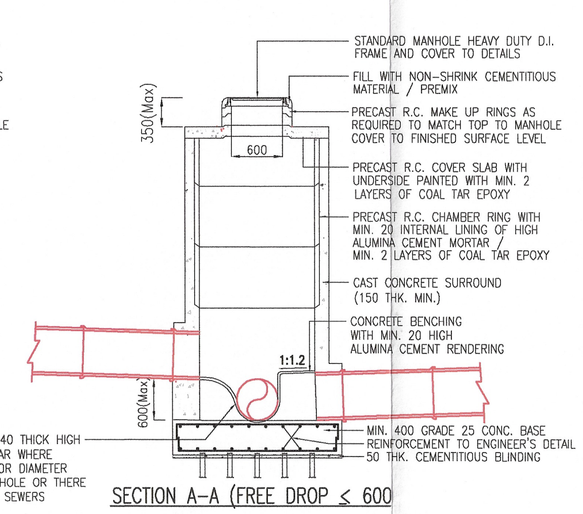

SECTION A–A (FREE DROP ≤ 600

(GROUND LEVEL TO INVERT LEVEL OF PIPE 1.2 ≤ D < 2.5 METERS)

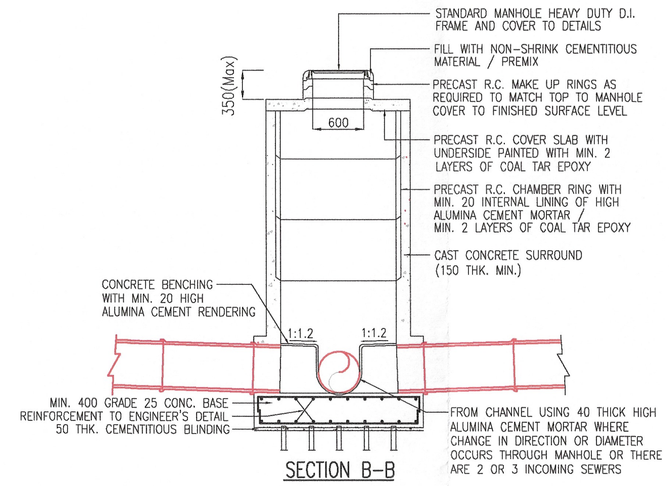

SECTION B–B

(GROUND LEVEL TO INVERT LEVEL OF PIPE 1.2 ≤ D < 2.5 METERS)

NOTE

1. ROCKER PIPE SHALL BE 600 LONG FOR SEWERS UP TO 300 DIAMETER AND 900 LONG FOR LARGER DIAMETER SEWER.
2. DIMENSIONS ARE IN MILIMETERS UNLESS OTHERWISE STATED.
3. S.I. REQUIRED TO DETERMINE SOIL CONDITION AND REQUIREMENT FOR PILING.
4. ALL STRUCTURAL ELEMENTS REQUIREMENTS SUBJECT TO ENGINEER'S DETAIL.
5. TOP OF MANHOLE COVER SHALL BE FLUSHED WITH THE FINISHED ROAD LEVEL.
6. TOP OF MANHOLE COVER TO GROUND FINISHED LEVEL TO BE 300–1000 FOR MANHOLE CONSTRUCTED OFF ROAD.
7. THE WALL OF MANHOLE THAT RECEIVES INCOMING PIPE SHALL BE CAST MONOLHITCALLY.
8. SEWER PIPES AND MANHOLE STRUCTURES SHOULD NOT BE CONSTRUCTED ON SLOPE OR WITHIN SLOPE FALURE ENVELOP, IN THE EVENT WHERE IT IS UNAVOIDABLE, THE SAID STRUCTURES MUST BE DESIGNED NOT TO ENCOUNTER SETTLEMENT OR THE SORTS AND AT ANY TIME AT RISK OF COLLAPSE DURING ITS OPERATING LIFESPAN.
9. FOR MANHOLE COVER WITH HINGE, OPENING OF COVER SHALL BE PERPENDICULAR TO THE DIRECTION OF FLOW AND IN ANYWAY SHOULD NOT OBSTRUCT THE ACCESS OF MANHOLE FOR MAINTENANCE WORKS.

FIGURE A3 : TYPICAL SHALLOW PRECAST CONCRETE MANHOLE (Ground Level to Invert of Pipe 1.2m ≤ Depth ≤ 2.5m)

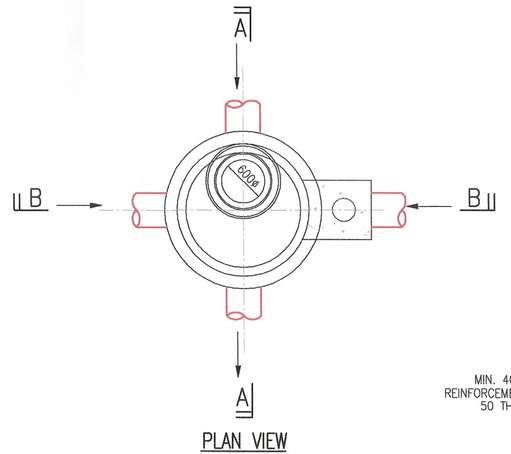

PLAN VIEW

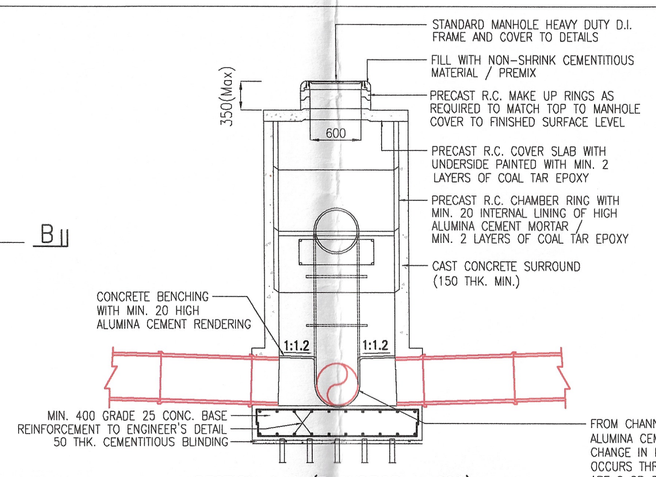

SECTION A–A (BACKDROP ≥ 600)

(GROUND LEVEL TO INVERT LEVEL OF PIPE 1.2 ≤ D < 2.5 METERS)

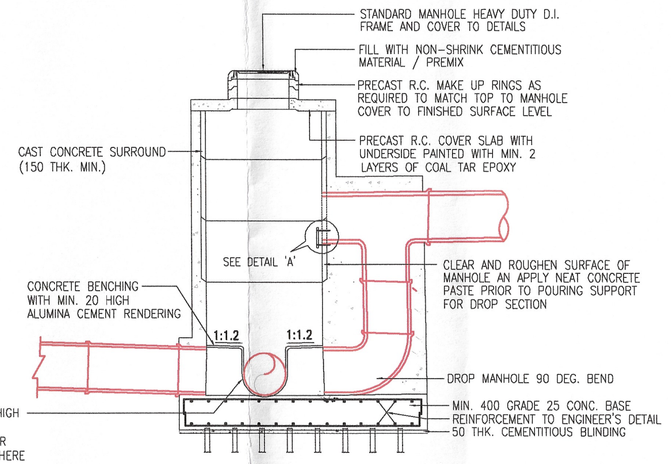

SECTION B–B (BACKDROP ≥ 600)

(GROUND LEVEL TO INVERT LEVEL OF PIPE 1.2 ≤ D < 2.5 METERS)

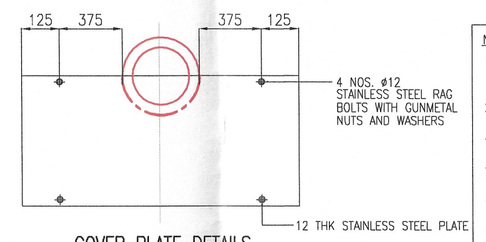

COVER PLATE DETAILS

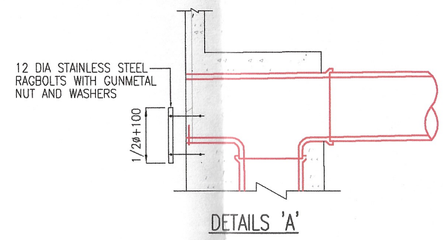

DETAILS 'A'

NOTE

1. ROCKER PIPE SHALL BE 600 LONG FOR SEWERS UP TO 300 DIAMETER AND 900 LONG FOR LARGER DIAMETER SEWER.
2. DIMENSIONS ARE IN MILIMETERS UNLESS OTHERWISE STATED.
3. S.I. REQUIRED TO DETERMINE SOIL CONDITION AND REQUIREMENT FOR PILING.
4. ALL STRUCTURAL ELEMENTS REQUIREMENTS SUBJECT TO ENGINEER'S DETAIL.
5. TOP OF MANHOLE COVER SHALL BE FLUSHED WITH THE FINISHED ROAD LEVEL.
6. TOP OF MANHOLE COVER TO GROUND FINISHED LEVEL TO BE 300–1000 FOR MANHOLE CONSTRUCTED OFF ROAD.
7. THE WALL OF MANHOLE THAT RECEIVES INCOMING PIPE SHALL BE CAST MONOLHITCALLY.
8. SEWER PIPES AND MANHOLE STRUCTURES SHOULD NOT BE CONSTRUCTED ON SLOPE OR WITHIN SLOPE FALURE ENVELOP, IN THE EVENT WHERE IT IS UNAVOIDABLE, THE SAID STRUCTURES MUST BE DESIGNED NOT TO ENCOUNTER SETTLEMENT OR THE SORTS AND AT ANY TIME AT RISK OF COLLAPSE DURING ITS OPERATING LIFESPAN.
9. FOR MANHOLE COVER WITH HINGE, OPENING OF COVER SHALL BE PERPENDICULAR TO THE DIRECTION OF FLOW AND IN ANYWAY SHOULD NOT OBSTRUCT THE ACCESS OF MANHOLE FOR MAINTENANCE WORKS.

FIGURE A4 : TYPICAL SHALLOW PRECAST CONCRETE MANHOLE WITH BACKDROP (Ground Level to Invert of Pipe 1.2m ≤ Depth ≤ 2.5m)

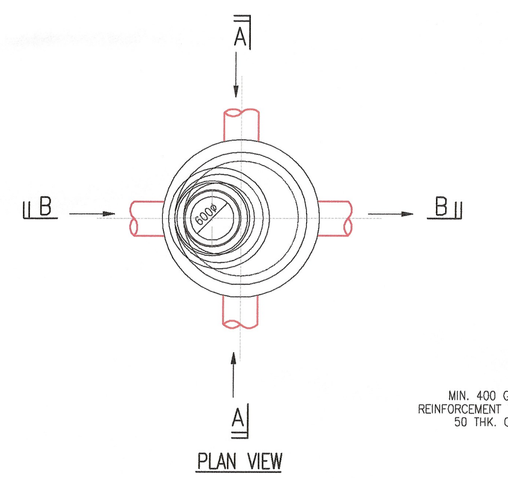

PLAN VIEW

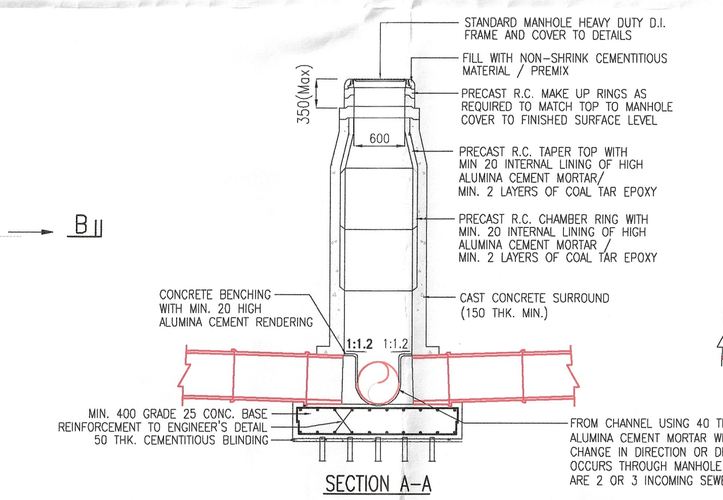

SECTION A–A

(MEDIUM : GROUND LEVEL TO INVERT LEVEL OF PIPE 2.5 ≤ D < 5 METERS)

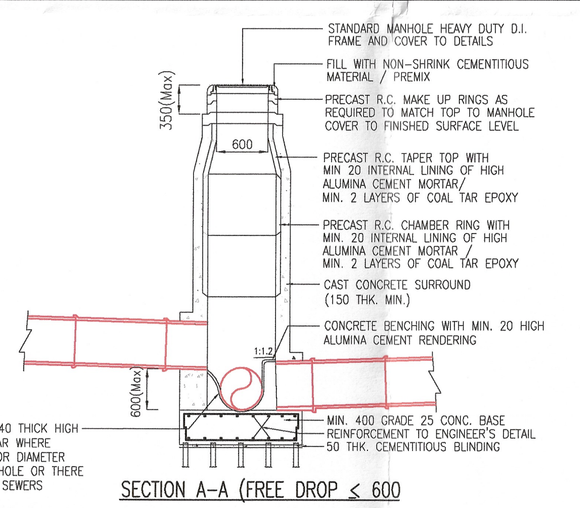

SECTION A–A (FREE DROP ≤ 600

(MEDIUM : GROUND LEVEL TO INVERT LEVEL OF PIPE 2.5 ≤ D < 5 METERS)

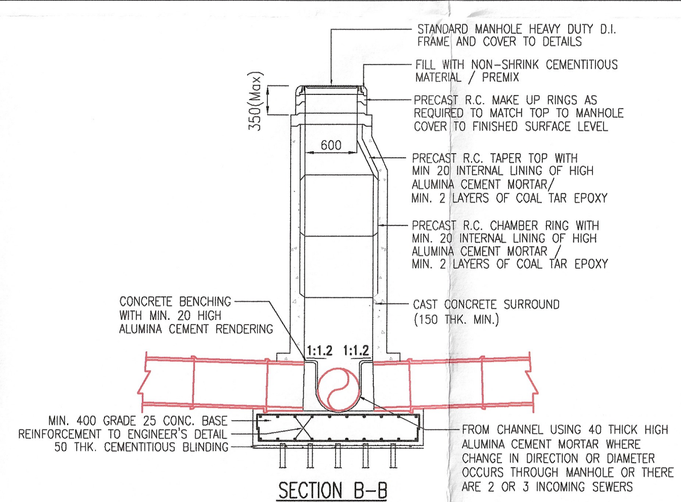

SECTION B–B

(MEDIUM : GROUND LEVEL TO INVERT LEVEL OF PIPE 2.5 ≤ D < 5 METERS)

NOTE

1. ROCKER PIPE SHALL BE 600 LONG FOR SEWERS UP TO 300 DIAMETER AND 900 LONG FOR LARGER DIAMETER SEWER.
2. DIMENSIONS ARE IN MILIMETERS UNLESS OTHERWISE STATED.
3. S.I. REQUIRED TO DETERMINE SOIL CONDITION AND REQUIREMENT FOR PILING.
4. ALL STRUCTURAL ELEMENTS REQUIREMENTS SUBJECT TO ENGINEER'S DETAIL.
5. TOP OF MANHOLE COVER SHALL BE FLUSHED WITH THE FINISHED ROAD LEVEL.
6. TOP OF MANHOLE COVER TO GROUND FINISHED LEVEL TO BE 300–1000 FOR MANHOLE CONSTRUCTED OFF ROAD.
7. THE WALL OF MANHOLE THAT RECEIVES INCOMING PIPE SHALL BE CAST MONOLHITCALLY.
8. SEWER PIPES AND MANHOLE STRUCTURES SHOULD NOT BE CONSTRUCTED ON SLOPE OR WITHIN SLOPE FALURE ENVELOP, IN THE EVENT WHERE IT IS UNAVOIDABLE, THE SAID STRUCTURES MUST BE DESIGNED NOT TO ENCOUNTER SETTLEMENT OR THE SORTS AND AT ANY TIME AT RISK OF COLLAPSE DURING ITS OPERATING LIFESPAN.
9. FOR MANHOLE COVER WITH HINGE, OPENING OF COVER SHALL BE PERPENDICULAR TO THE DIRECTION OF FLOW AND IN ANYWAY SHOULD NOT OBSTRUCT THE ACCESS OF MANHOLE FOR MAINTENANCE WORKS.

FIGURE A5 : TYPICAL MEDIUM PRECAST CONCRETE MANHOLE (Ground Level to Invert of Pipe 2.5m < Depth < 5m)

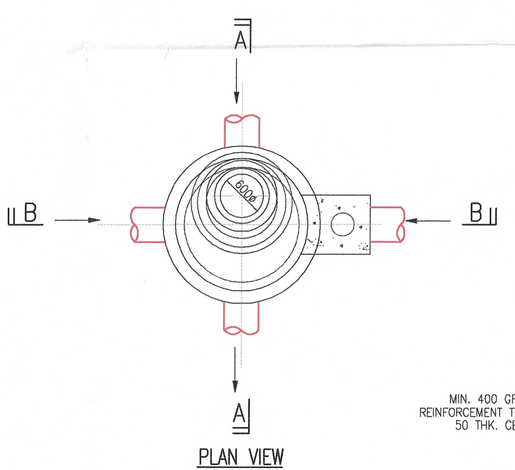

PLAN VIEW

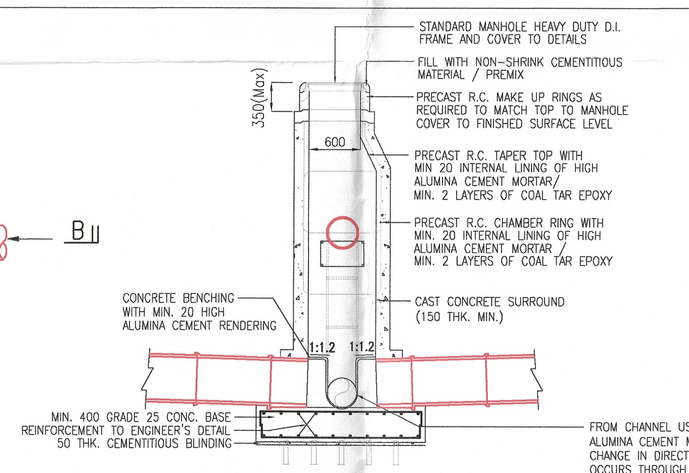

SECTION A–A (BACKDROP ≥ 600)

(DEEP : GROUND LEVEL TO INVERT LEVEL OF PIPE 2.5 < D ≤ 5 METERS)

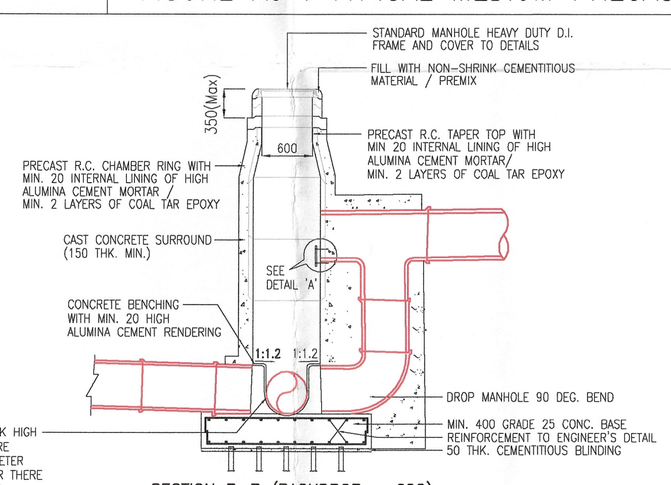

SECTION B–B (BACKDROP > 600)

(DEEP : GROUND LEVEL TO INVERT LEVEL OF PIPE 2.5 < D ≤ 5 METERS)

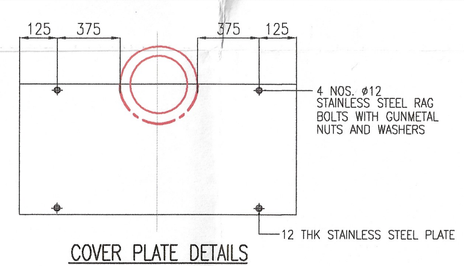

COVER PLATE DETAILS

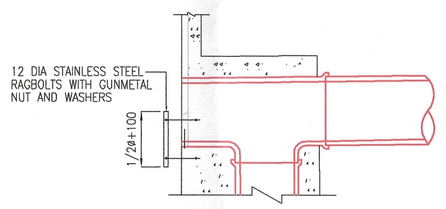

DETAILS 'A'

NOTE

1. ROCKER PIPE SHALL BE 600 LONG FOR SEWERS UP TO 300 DIAMETER AND 900 LONG FOR LARGER DIAMETER SEWER.
2. DIMENSIONS ARE IN MILIMETERS UNLESS OTHERWISE STATED.
3. S.I. REQUIRED TO DETERMINE SOIL CONDITION AND REQUIREMENT FOR PILING.
4. ALL STRUCTURAL ELEMENTS REQUIREMENTS SUBJECT TO ENGINEER'S DETAIL.
5. TOP OF MANHOLE COVER SHALL BE FLUSHED WITH THE FINISHED ROAD LEVEL.
6. TOP OF MANHOLE COVER TO GROUND FINISHED LEVEL TO BE 300–1000 FOR MANHOLE CONSTRUCTED OFF ROAD.
7. THE WALL OF MANHOLE THAT RECEIVES INCOMING PIPE SHALL BE CAST MONOLHITCALLY.
8. SEWER PIPES AND MANHOLE STRUCTURES SHOULD NOT BE CONSTRUCTED ON SLOPE OR WITHIN SLOPE FALURE ENVELOP, IN THE EVENT WHERE IT IS UNAVOIDABLE, THE SAID STRUCTURES MUST BE DESIGNED NOT TO ENCOUNTER SETTLEMENT OR THE SORTS AND AT ANY TIME AT RISK OF COLLAPSE DURING ITS OPERATING LIFESPAN.
9. FOR MANHOLE COVER WITH HINGE, OPENING OF COVER SHALL BE PERPENDICULAR TO THE DIRECTION OF FLOW AND IN ANYWAY SHOULD NOT OBSTRUCT THE ACCESS OF MANHOLE FOR MAINTENANCE WORKS.

FIGURE A4 : TYPICAL MEDIUM PRECAST CONCRETE MANHOLE WITH BACKDROP (Ground Level to Invert of Pipe 2.5m < Depth < 5m)

LOCAL AUTHORITY

INDAH WATER KONSORTIUM SDN. BHD.
AGENSI PERAKUAN - PEMBETUNGAN (diilantik oleh SPAN)
PELAN-PELAN UNTUK MEMBINA REKABENTUK SISTEM PEMBETUNGAN ADALAH
DILULUSKAN
BERTAKLUK KEPADA PENGESAHAN/TANDATANGAN JURUTERA PROFESIONAL BERKENAAN DAN TERTERTAKLUK KEPADA SYARAT-SYARAT BIL: 1 hingga 12
DI DALAM FAIL RUJ/KJ PK 01/22/0034
I) KELULUSAN ASAL
II) PINDAAN PERTAMA
III) PINDAAN KEDUA
Pengurus
Agensi Pemakaian - Pembetungan
Perak Darul Ridzuan
(diilantik oleh SPAN)
Tarikh: 21/1/23
KELULUSAN INI TIDAK TERMASUK REKABENTUK STRUKTUR KEJURUTERAAN

PROJECT :

CADANGAN PAIP PEMBETUNGAN BAGI :
CADANGAN MEMBINA 1 BLOK SERVIS APARTMENT 27 TINGKAT YANG MENGANDUNGI :
1. 200 UNIT SERVIS APARTMENT JENIS A
2. 186 UNIT SERVIS APARTMENT JENIS B
3. 4 UNIT SERVIS DUPLEX LOFT TYPE A
4. 4 UNIT SERVIS DUPLEX LOFT TYPE B
DENGAN KEMUDAHAN REKREASI (KOLAM RENANG, GIM, ROOF GARDEN, DEWAN KOMUNITI), PEJABAT PENGURUSAN, PONDOK PENGAWAL, KEBUK SAMPAH & KEMUDAHAN–KEMUDAHAN LAIN, 1 BLOK BANGUNAN PERNIAGAAN 2 TINGKAT 1 BLOK TEMPAT LETAK KERETA 4 TINGKAT DI ATAS PLOT 1 DAN 1 UNIT PENCAWANG ELEKTRIK TNB DI ATAS PLOT 2, DI ATAS LOT 535822, LEBUH BERCHAM SELATAN, MEDAN BERCHAM SELATAN, BERCHAM, MUKIM HULU KINTA, DAERAH KINTA, PERAK DARUL RIDZUAN. UNTUK TETUAN LIFESTYLE ENRICHED SDN. BHD.

SEWERAGE

REV. NO.	DESCRIPTION	DATE

OWNER'S SIGNATURE

LIFESTYLE ENRICHED SDN. BHD. (1060108–A)
NAMA : HO SENG LOONG
I/C NO. : 681222–08–5897
ALAMAT : 2–23(A), FESTIVAL WALK @ IPOH, JALAN MEDAN IPOH, MEDAN IPOH BISTARI, 31400, IPOH, PERAK.
TEL NO. : 05–5479298

CONSULTANT'S SIGNATURE

I HEREBY CERTIFY THAT THESE WORKS HAVE BEEN DESIGNED BY ME IN ACCORDANCE WITH SOUND ENGINEERING PRACTICE AND THAT I TAKE FULL RESPONSIBILITY FOR THE DESIGN AND PROPER PERFORMANCE OF THE SAME.

JURUTERA PROFESIONAL BORANG PERAKUAN MALAYSIA
AWAM
Ir. JOSHUA LEONG CHEE K'IZ
C116026
MALAYSIA

IR. JOSHUA LEONG CHEE K'IZ M. I. E. M. P. ENG. (CIVIL)
AJL PERUNDING
Civil & Structural Engineering Consultancy
No.64, Tingkat Ipoh 1, Taman Ipoh, 31400 Ipoh, Perak Darul Ridzuan.
Tel. : 05–5450 560
Email : ajlperunding@gmail.com

DRAWING TITLE :

SEWER MANHOLE & CONNECTION DETAILS (3)

DESIGNED	: JL	DRAWN	: JOANNE
DATE	: DECEMBER 2022	CHECKED	: JL
STATUS	: SUBMISSION1(PDC2)	SCALE	: 1 : 100

REV: 0

AJL310/INFRA/SW/5 OF 6

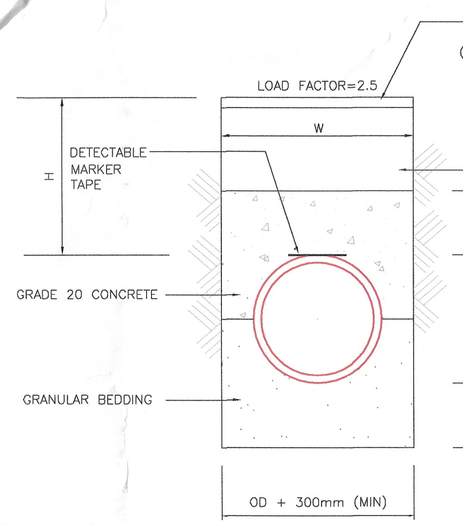

CLASS 'A' BEDDING
CONCRETE ARCH

PIPE EMBEDDED IN CAREFULLY COMPACTED CRUSHER RUN 5–20mm SIZE RANGE EXTENDING HALFWAY UP TO SIDES OF THE PIPE, THE REMAINDER SIDE FILLS AND TOP WITH MONOLITHIC PLAIN CONCRETRE

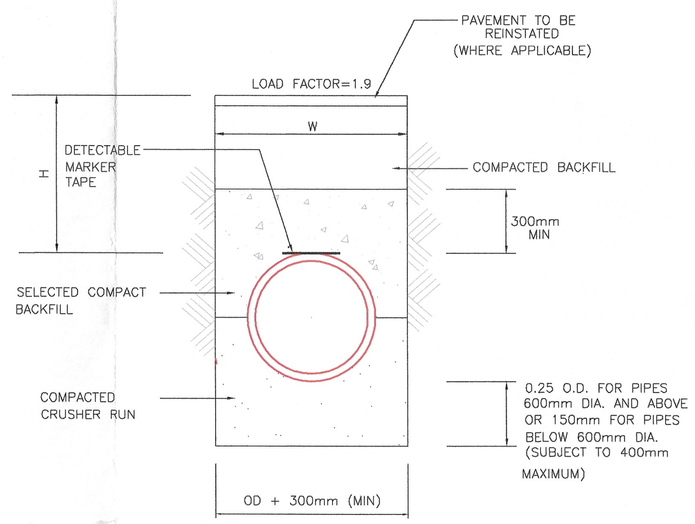

CLASS 'B' BEDDING
COMPACTED CRUSHER RUN

PIPE EMBEDDED IN CAREFULLY COMPACTED CRUSHER RUN 5–20mm SIZE RANGE EXTENDING HALFWAY UP TO SIDES OF THE PIPE, THE REMAINDER SIDE FILLS AND TOP TO BE COMPACTED CAREFULLY WITH BACKFILL

THE SELECTED COMPACT BACKFILL FOR VITRIFIED CLAY PIPE SHALL BE COMPACTED DRY SOIL. (FREE FROM VEGETABLE ORGANIC MATTERS & EXCAVATION/COMPACTED DRY RED EARTH/SAN/CHIPPING/STONES NOT GREATER THAN 26.

PIPE SIZE	MAX TRENCH WIDTH (W)
100mm ø	700mm
150mm ø	750mm
225mm ø	825mm
300mm ø	900mm
375mm ø	975mm

TABLE 1
MAXIMUM TRENCH WIDTH

	VITRIFIED CLAY PIPE MINIMUM REQUIRED PIPE CRUSHING STRENGTH (kN/M)						
DEPTH OF COVER H(m)	100mmø	150mmø	200mmø	225mmø	300mmø	375mmø	450mmø
≤ 1.0	28	28	32	28	36	45	43
≤ 1.5	28	28	32	28	36	45	43
≤ 2.0	28	28	32	28	36	45	43
≤ 2.5	28	28	32	36	36	45	43
≤ 3.0	28	28	32	36	36	45	43
≤ 3.5	28	28	32	36	36	45	43
≤ 4.0	28	28	32	36	36	45	43
≤ 4.5	28	28	32	36	36	45	43
≤ 5.0	28	28	32	36	36	36	43
≤ 5.5	28	28	32	36	36	45	43
≤ 6.0	28	28	32	36	36	45	54
≤ 6.5	28	28	32	36	48	45	54
TRAFFIC COVER	900	900	900	900	900	900	900
MIN. BED THICKNESS	100	100	150	150	150	150	150

USE CLASS 'A' BEDDING

USE CLASS B' BEDDING

TABLE 2
STRENGTH V.C.P. FOR VARIOUS DEPTH

NOTE:
ALL VCP PIPES CRUSHING STRENGHT, FN (kN/m) FOR VARIOUS DIAMETERS OF PIPE TO BE REFERRED TO TABLE 4 AND TABLE 5, MS 1061: PART 1

NOTE:–

1. TYPICAL BEDDING IS TO BE USED FOR ALL PIPES UNDER NORMAL SITE CONDITION UNLESS DIRECTED OR SHOWN BY ENGINEER.
2. UNSER CIRCUMSTANCES WHERE TYPICAL BEDDING IS NOT PERMISSIBLE AT SITE, THE BEDDING SHALL BE DESIGNED AND APPLIED ACCORDINGLY AS DIRECTED BY THE ENGINEER.
3. TABLE 2 AND TABLE 3 SHALL BE USED STRICTLY IN ACCORDANCE WITH RELEVANT REQUIREMENTS. PROPER DESIGN SHALL BE CARRIED OUT BY ENGINEER SHOULD THE REQUIREMENT COULD NOT BE WET.
4. WHENEVER CONCRETE BACKFILL OR ENCASEMENT IS PLACED, A TRANSVERSE BREAK AT EACH PIPE JOINT SHALL BE MADE AS SPECIFIED TO MAINTAIN FLEXIBILITY OF THE PIPE LINE. EXPANSION MATERIAL SHALL BE FULL DEPTH AND PLACED AS DIRECTED BY THE ENGINEER.
5. THE DEFLECTION AT FLEXIBLE PIPE JOINTS SHALL NOT BE MORE THAN SPECIFIED IN ACCORDANCE TO THE RESPECTIVE PIPE STANDARD IN THE INSTALLED POSITION IN ANY DIRECTION AND TO BE TESTED ACCORDINGLY.
6. TRAFFIC COVER REFER TO MIN. COVER REQUIRED BEFORE TRAFFIC LOAD BECOMES NEGLIGIBLE. CONCRETE BACKFILL AS IN CLASS 'A' BEDDING IS REQUIRED IF MIN. COVER CANNOT BE ACHIEVED WITH MIN. BED THICKNESS AS SHOWN IN TABLE 2.
7. ABBREVIATION:
   ON = NORMAL SIZE
   O.D = OUTER DIAMETER OF PIPE
   M = CLASS M
   H = CLASS H
   1.5H = CLASS 1.5H
   2H = CLASS 2H
   2.5H = CLASS 2.5H
   3H = CLASS 3H
8. FOR FILLING OF TRENCHES ALONG/ACROSS CARRIAGEWAY, BACKFILL, MATERIAL SHALL BE SAND FROM AN APPROVED SOURCE AND TO BE COMPACTED BY FLOODING IN 300mm MAXIMUM LAYERS IN CONJUNCTION WITH THE ENGINEER'S REQUIREMENT.
9. ALL FOUNDATION, BEDDING, HAUNCHING AND INITIAL BACKFILL TO BE INSTALLED AND COMPACTED IN 150mm MAXIMUM LAYERS.
10. WHERE SAND IS USED AS BEDDING OR BACKFILL MATERIAL, IT SHOULD BW COMPACTED BY FLOODING AT PRESCRIBED LAYERS,
11. FOR THE PURPOSE OF STRUCTURAL, DESIGN THE NORMAL WALL THICKNESS AND/OR NOMINAL OUTSIDE DIAMETER SHOULD BE DECLARED BY THE MANUFACTURER.
12. S.I IS REQUIRED TO DETERMINE SOIL CONDITION AND REQUIREMENT FOR PILING.
13. DETECTABLE MARKER TAPE SHALL BE POSITIONED WITHIN THE DETECTABLE RANGE AND INSTALLATION PROCEDURE TO MANUFACTURER'S RECOMMENTATION.
14. SEWER PIPES AND MANHOLE STRUCTURES SHOULD NOT BE CONSTRUCTURED ON SLOPE OR WITHIN SLOPE FAILURE ENVELOPE. IN THE EVENT WHERE IT IS UNAVOIDABLE, THE SAID STRUCTURES MUST BE DESIGNED NOT TO ENCOUNTER SETTLEMENT OR THE SORTS AND AT ANY TIME AT RISK FO COLLAPSE DURING ITS OPERATING LIFESPAN.

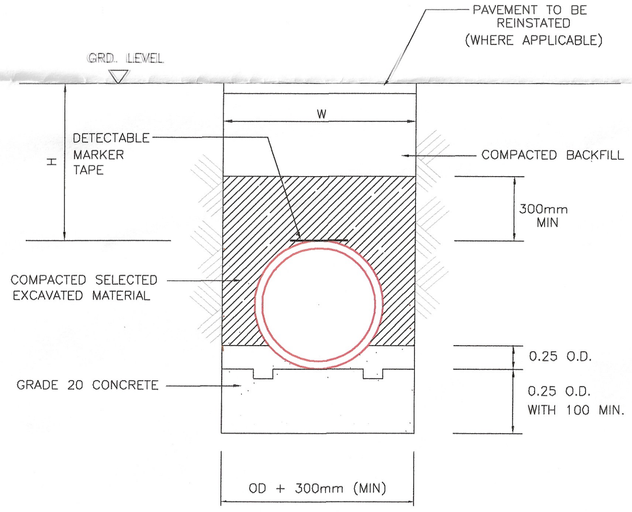

CONCRETE CRADLE
BEDDING FACTOR 2.6

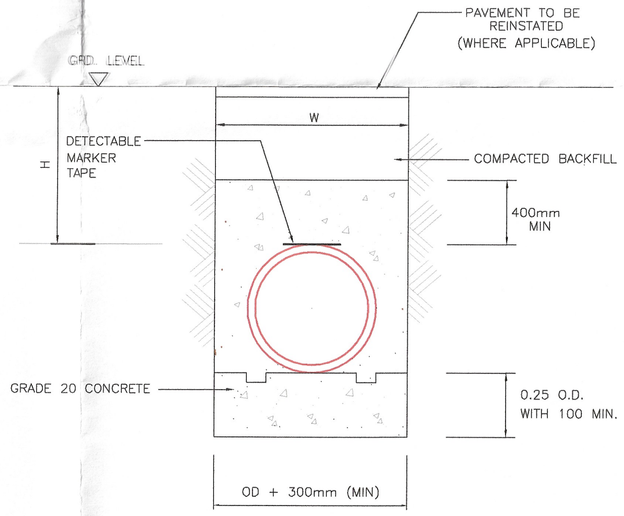

CONCRETE SURROUND
BEDDING FACTOR 3.0

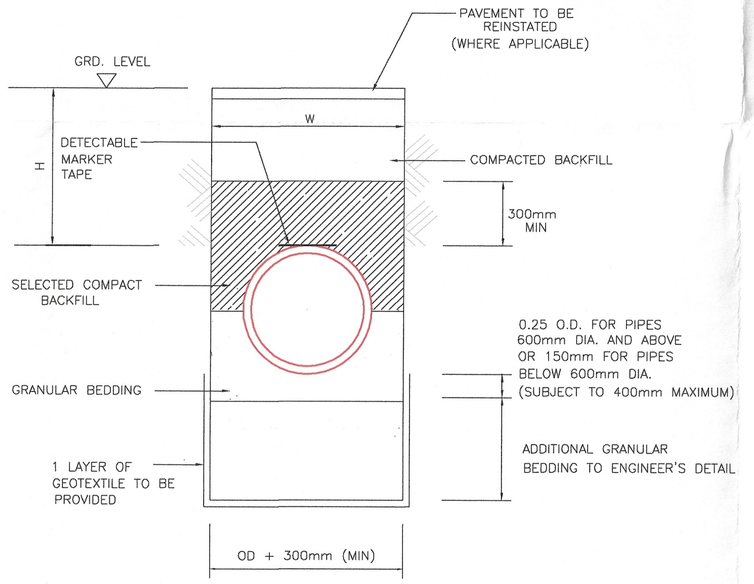

CONCRETE CRADLE
BEDDING FACTOR 2.6

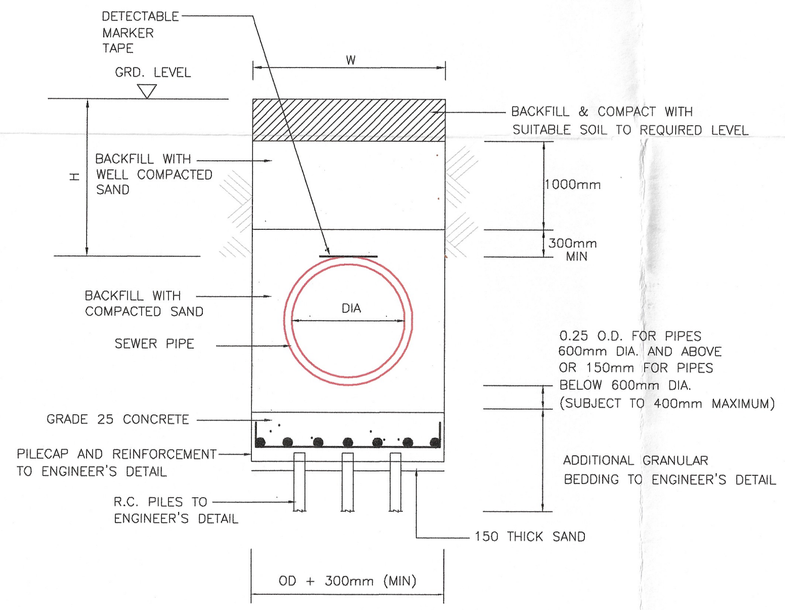

TYPE 'D' BEDDING
(VERY SOFT GROUND)

NOTE:–

1. TYPICAL BEDDING IS TO BE USED FOR ALL PIPES UNDER NORMAL SITE CONDITION UNLESS DIRECTED OR SHOWN BY ENGINEER.
2. UNSER CIRCUMSTANCES WHERE TYPICAL BEDDING IS NOT PERMISSIBLE AT SITE, THE BEDDING SHALL BE DESIGNED AND APPLIED ACCORDINGLY AS DIRECTED BY THE ENGINEER.
3. FOR FILLING OF TRENCHES ALONG/ACROSS CARRIAGEWAY, BACKFILL MATERIAL SHALL BE SAND FROM AN APPROVED SOURCE AND TO BE COMPACTED BY FLOODING IN 300mm MAXIMUM LAYERS IN CONJUNCTION WITH THE ENGINEER'S REQUIREMENTS.
4. FOR THE PURPOSE OF STRUCTURAL DESIGN THE NOMINAL WALL THICKNESS AND/ OR NOMINAL OUTSIDE DIAMETER SHOULD BE DECLARED BY THE MANUFACTURER.
5. FOR TESTING OF WATER TIGHTNESS, THE MAXIMUM ALLOWANCE INFILTRATION RATE IS 1 LITER PER HOUR PER LINEAR METER INTERNAL DIAMETER OF PIPE.
6. PLACE EMBEDMENT MATERIALS BY METHODS THAT WILL NOT DISTURB OR DAMAGE THE PIPE. WORK IN OR TAMP THE HAUNCHING MATERIAL IN THE AREA BETWEEN THE BEDDING AND THE UNDERSIDE OF THE PIPE BEFORE PLACING AND COMPACTING THE REMAINDER OF THE EMBEDMENT IN THE PIPE ZONE.
7. WHERE HIGH WATER–TABLE IS ENCOUNTERED, ALLOWANCE FOR APPROPRIATE DEWATERING METHOD SHALL BE UTILISED IN ORDER THAT THE PIPE BEDDING CAN BE LAID IN THE DRY. APPROPRIATE METHOD OF CONSTRUCTION SHALL BE USED TO PREVENT DAMAGE OF THE LAID SEWER LINE PRIOR TO BACKFILLING.
8. TYPE C BEDDING SHALL BE USED IN THE CASE WHERE SOFT GROUND IS ENCOUNTERED. SUCH SOFT GROUND SHALL GENERALLY BE TAKEN TO BE THOSE SOIL HAVING A STRENGTH OF CU GREATER THAN 2.5KN/m2. AS OBTAINED BY THE IN–SITU VANE SHEAR TEST. THE ENGINEER SHALL DETERMINE SUCH THE CLASSIFICATION AND EXTEND OF SUCH SOIL FOLLOWING FROM IN–SITU WANE SHEAR TEST CARRIED OUT BY THE CONTRATOR.
9. TYPE D BEDDING SHALL BE USED IN THE CASE WHERE VERY SOFT GROUND IS ENCOUNTERED. SUCH VERY SOFT GROUND SHALL GENERALLY BE TAKEN TO BE THOSE SOIL HAVING A STRENGTH OF CU. OF EQUAL OR LESS THAN 2.5KN/m2. AS OBTAINED BY THE IN–SITU VANE SHEAR TEST, THE LENGHT OF PILES TO BE USED SHALL BE DETERMINED BY THE ENGINEER AFTER INVESTIGATION TO DETERMINE THE SOFT LAYER HAS BEEN CARRIED OUT BY THE CONTRACTOR.
10. THE CONCRETE CAP OR CRADLE SHALL START AND TERMINATE AT THE FACE OF PIPE JOINTS TO AVOID SHEAR CRACK.
11. DETECTABLE MARKER TAPE SHALL BE POSITIONED WITHIN THE DETECTABLE RANGE AND INSTALLATION PROCEDURE TO MANUFACTURER'S RECOMMENTATION.
12. SEWER PIPES AND MANHOLE STRUCTURES SHOULD NOT BE CONSTRUCTURED ON SLOPE OR WITHIN SLOPE FAILURE ENVELOPE. IN THE EVENT WHERE IT IS UNAVOIDABLE, THE SAID STRUCTURES MUST BE DESIGNED NOT TO ENCOUNTER SETTLEMENT OR THE SORTS AND AT ANY TIME AT RISK FO COLLAPSE DURING ITS OPERATING LIFESPAN.

LOCAL AUTHORITY

INDAH WATER KONSORTIUM SDN. BHD.
AGENSI PERAKUAN - PEMBETUNGAN (diluluskan oleh SPAN)
PELAN-PELAN UNTUK MEMBINA REKABENTUK SISTEM PEMBETUNGAN ADALAH
DILULUSKAN
BERTASKAN KEPADA PENGESAHAN/TANDATANGAN JURUTERA PROFESIONAL BERKENAAN DAN TERTERTUK KEPADA SYARAT-SYARAT BIL: 1 Bilangan 12
DI DALAM FAIL IWK/ PK 01/ 22/ 0039.
I) KELULUSAN ASAL
II) PINDAAN PERTAMA
III) PINDAAN KEDUA
Pengurus
Agensi Perakuan - Pembetungan
Perak Darul Ridzuan
(diluluskan oleh SPAN)
Tarikh 2/2/23
KELULUSAN INI TIDAK TERMASUK REKABENTUK STRUKTUR KEJURUTERAAN

PROJECT :
CADANGAN PAIP PEMBETUNGAN BAGI :
CADANGAN MEMBINA 1 BLOK SERVIS APARTMENT 27 TINGKAT YANG MENGANDUNGI :
1. 200 UNIT SERVIS APARTMENT JENIS A
2. 186 UNIT SERVIS APARTMENT JENIS B
3. 4 UNIT SERVIS DUPLEX LOFT TYPE A
4. 4 UNIT SERVIS DUPLEX LOFT TYPE B
DENGAN KEMUDAHAN REKREASI (KOLAM RENANG, GIM, ROOF GARDEN, DEWAN KOMUNITI), PEJABAT PENGURUSAN, PONDOK PENGAWAL, KEBUK SAMPAH & KEMUDAHAN–KEMUDAHAN LAIN, 1 BLOK BANGUNAN PERNIAGAAN 2 TINGKAT 1 BLOK TEMPAT LETAK KERETA 4 TINGKAT DI ATAS PLOT 1 DAN 1 UNIT PENCAWANG ELEKTRIK TNB DI ATAS PLOT 2, DI ATAS LOT 535822, LEBUH BERCHAM SELATAN, MEDAN BERCHAM SELATAN, BERCHAM, MUKIM HULU KINTA, DAERAH KINTA, PERAK DARUL RIDZUAN. UNTUK TETUAN LIFESTYLE ENRICHED SDN. BHD.

SEWERAGE

REV. NO.	DESCRIPTION	DATE

OWNER'S SIGNATURE

LIFESTYLE ENRICHED SDN. BHD. (1060108–A)

NAMA : HO SENG LOONG
I/C NO. : 82-222-08-5897
ALAMAT : 2-23(A), FESTIVAL WALK @ IPOH, JALAN MEDAN IPOH, MEDAN IPOH BISTARI, 31400, IPOH, PERAK.
TEL NO. : 05-5479298

CONSULTANT'S SIGNATURE

I HEREBY CERTIFY THAT THESE WORKS HAVE BEEN DESIGNED BY ME IN ACCORDANCE WITH SOUND ENGINEERING PRACTICE AND THAT I TAKE FULL RESPONSIBILITY FOR THE DESIGN AND PROPER PERFORMANCE OF THE SAME.

JURUTERA PROFESIONAL SEKSYEN PERAKUAN MALAYSIA
AMJAM
Ir. JOSHUA LEONG CHEE K'IZ
C116026
MALAYSIA

IR. JOSHUA LEONG CHEE K'IZ M. I. E. M. P. ENG. (CIVIL)
AJL PERUNDING
Civil & Structural Engineering Consultancy
No.64, Tingkat Ipoh 1, Taman Ipoh, 31400 Ipoh, Perak Darul Ridzuan.
Tel. : 05-5450 560
Email : ajlperunding@gmail.com

DRAWING TITLE :
SEWER MANHOLE & CONNECTION DETAILS (4)

DESIGNED	: JL	DRAWN	: JOANNE
DATE	: DECEMBER 2022	CHECKED	: JL
STATUS	: SUBMISSION1(PDC2)	SCALE	: 1 : 100

REV 0

AJL310/INFRA/SW/6 OF 6